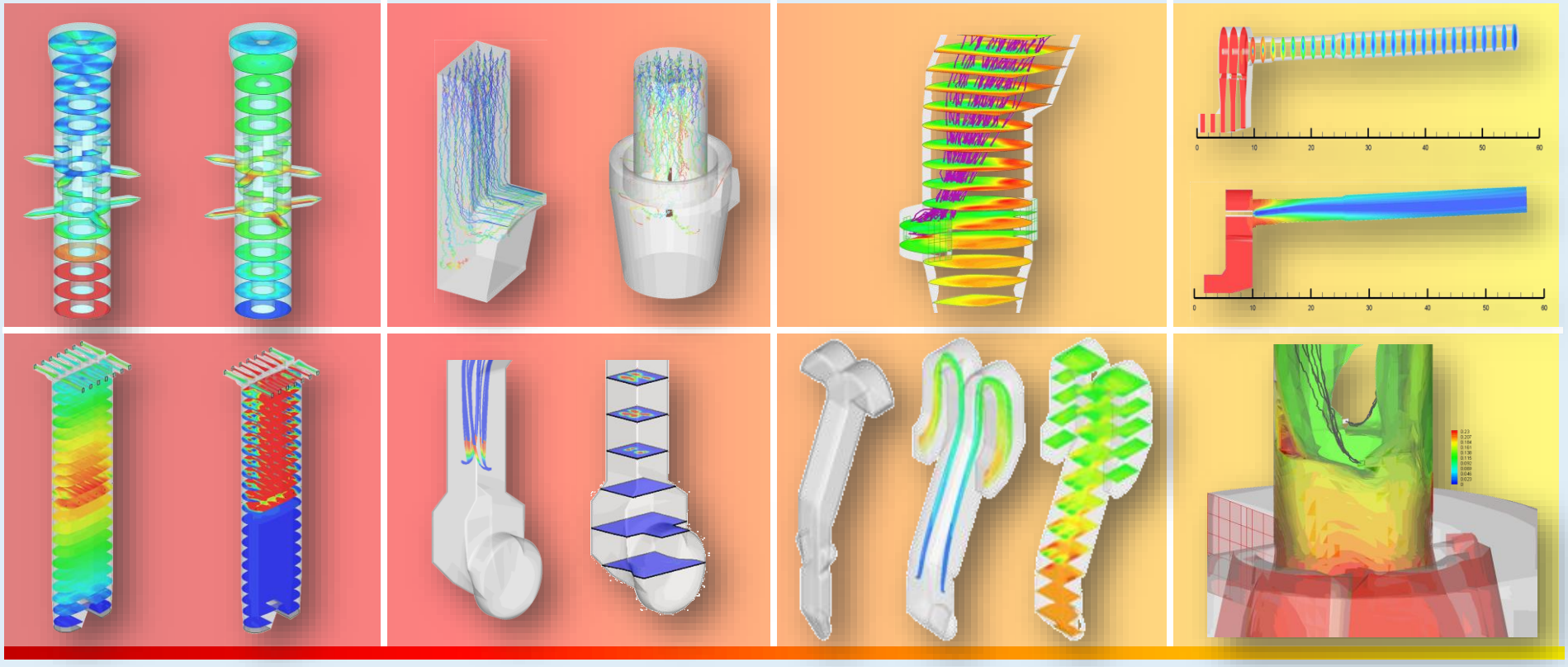

Cinar Ltd: Est. 1988

Providing Combustion and Process servies for over 25 Years

CINAR
LTD

What Cinar is and What it Does?

Cinar is a 'Spin-Out' Company from IC, incorporated in 1988 to provide Technical services to Combustion and Emissions related Problems;

Cinar applies its 'in-house' developed models (CFD/MI-CFD) to solve industrial problems

Industrial applications:

- **Boilers (power plants);**
- **Stationary/Aero gas turbines;**
- **Incinerators;**
- **Steel reheating/Blast furnaces;**
- **Glass/brick industries;**
- **R&D projects: EU/DTi (over 20)**
- **Cement and lime plants;**

200 Projects

CINAR LTD

Cinar and its Services

What is so Special in Cinar's Approach?	MI-CFD, (includes mineral interaction & multi-fuel combustion models)
Who else can provide the same services?	Only CFD Part
What's the difference?	Realistic T & CO_2
How long does it take to provide a solution?	10-12 Weeks
How much does it cost?	You'd love it!
What's the payback time?	Few Weeks
What are the typical advantages?	Low Capex/free estim.
Are there any successful applications?	Many!!
What's the typical output from MI-CFD?	3-D design spec.

CINAR LTD

CINAR - Associates

ALTERROS

Customised AFR design/installation

Emissions

Plant trials

fives pillard

Burner

Design

Testing

Commissioning

Purpose-built burners

CINAR Ltd

Solving Industry's Combustion Problems - Worldwide

Plant performance analysis via MI-CFD

Burner/Combustion system design

Low-CapEx Solutions

pm TECHNOLOGIES

FINEST SOLUTIONS

Cyclone technologies

Preheater/calciner upgrade

Installation and commissioning services

CEMENTIS

Fuel Strategy

Business planning

AFR Market analysis

Permitting/lobby

Complete Solutions!

CINAR LTD

Some of Cinar's Clients-Producers and Manufacturers

LAFARGE
LafargeHolcim
Holcim
CRH
CEMEX
Italcementi Group
HEIDELBERG CEMENT
Dyckerhoff
GCC Grupo Cementos de Chihuahua
ADITYA BIRLA UltraTech
TAIHEIYO CEMENT
5 Projects
اسمنت العربية Arabian Cement
Votorantim Cimentos
CIMPOR
18 Projects
CHERAT CEMENT
BORAL
ASH GROVE
FLSMIDTH
fives ultimate machines ultimate factory
SCG
VASSILIKO CEMENT
Lhoist
15 Projects
CARMEUSE NATURAL CHEMICALS
pm TECHNOLOGIES FINEST SOLUTIONS
magnesita
babcock trusted to deliver
KFS combustion by design

AKCANSA CEMENT - CANAKKALE

For LafargeHolcim, completed over 35 projects

CINAR LTD

MI-CFD Assistance for new Plants (Petcoke/AFR)

Date	Calciner type	Production	Primary Fuel	TSR	Alternative Fuels
2010	Polysius RSP	4000 tpd	Petcoke	20%	SRF 1
2012	FLS-ILC "Low Nox"	3000 tpd	Petcoke	35%	Tyre chips, SRF 2
2013	FLS - ILC	2700 tpd	Petcoke	43%	SRF1, domestic waste
2013-2014	FLS – ILC "Low Nox	4700 tpd	Petcoke	64%	Tyre chips, SRF 2
2013-2014	FLS – ILC "Low Nox"	3000 tpd	Petcoke	84%	Tyre chips, SRF 2, rice husk, sawdust briquette
2014	FLS – ILC	2600 tpd	Petcoke	55%	Tyre chips, SRF 1, contaminated soil
2014	FLS – ILC	2950 tpd	Petcoke	34%	Tyre chips, SRF 2
2015-2016	Polysius	2800 tpd	Petcoke	9%	Tyre chips, SRF 2
2015-2016	Sinoma	4100 tpd	Petcoke	50%	Tyre chips, SRF 2

CINAR LTD

Cinar Workshops (MI-CFD)

- Holcim, (USA), Europe (Eastern), Indonesia
- Lafarge (North America),
- GCC (North America),
- Essroc (North America),
- Fives-Pillard (Europe & China),
- IEEE/PCA (USA) & Cinar workshops (I, II and III),
- Heidelberg, Italcementi, Cimpor, BMH (Europe),
- Cherat and Vicram Cements (Pakistan & India), SGC (Thailand)
- Votorantim (Brazil)
- TCC (Japan)
- Lafarge-Holcim, (China)

CINAR LTD

The Simulation Tool: MI-CFD

- Multi-fuel firing capability (coal, oil, gas, AF's) – tracking all fuels as they burn;

- Combustion is Directly coupled with Calcination and clinker formation chemistry – (Hence CO_2 release from combustion and calcination are taken into account plus temperature drop due to calcination – both are essential in predicting the 'hot-spots', CO, NOx, burnout and calcination levels).

Applied and tested on over 200 kilns and calciners

Lhoist Projects

- 2001 Rotary kiln off center gas burner (patent)
- 2008-2009: Dugny ASK various fuels
- 2009-2010: MLD RCE temperature profile. NOx reduction
- 2010: MTZ PFRK temperature/gas profile
- 2010 Terrasson PFRK NOx reduction (patent)
- 2011: Gorazdze PFRK Lean Gas (lower CV NG)
  FLD PFRK NG Vs oil
- 2012: PFRK 600 tpd flexible template
- 2013: Jemelle ASK kiln & lower burners. Flameless combustion
- 2014: Jemelle ASK upper multichannel burner (patent to be filed)
  HSI oil in PFRK. Evaluation of Maerz (patent)
  O'Neal K2 preheater cassette
- 2015: Limeira NG firing PFRK reducing conditions
- 2016: St. Gen. kiln burner evaluation (in progress)

CINAR LTD

Annular-Shaft-Kiln (RAC)

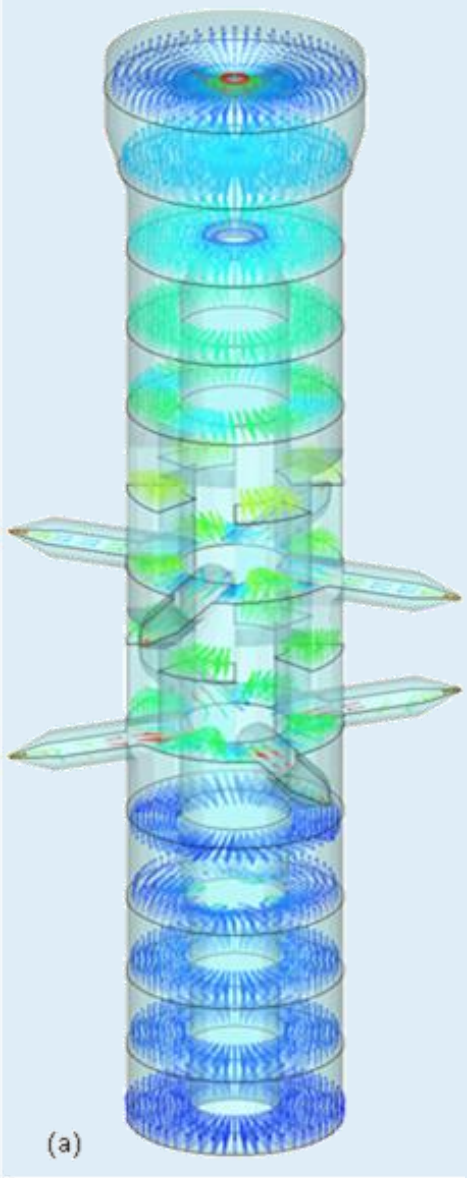

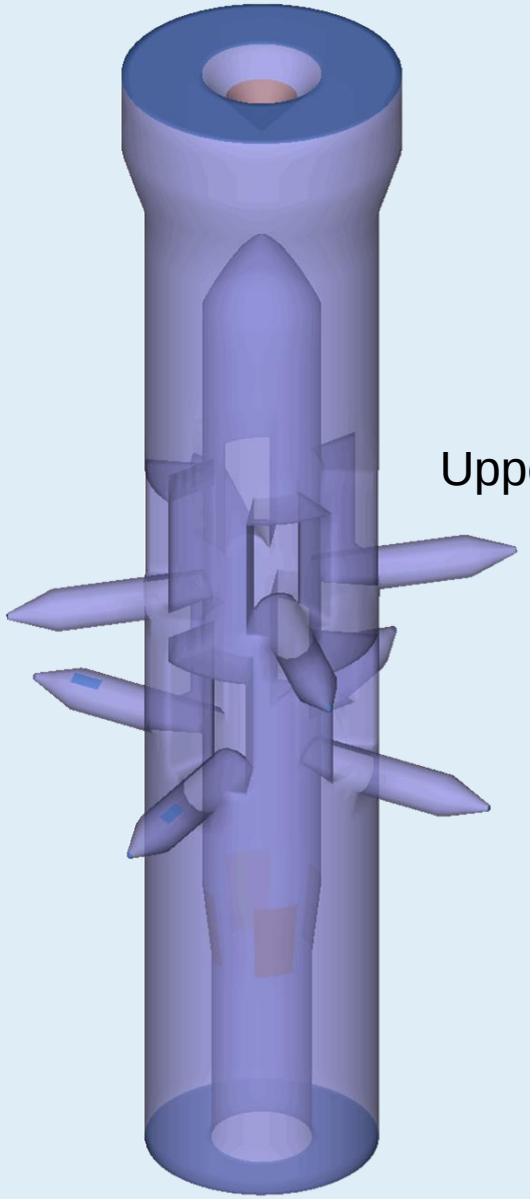

Upper burners

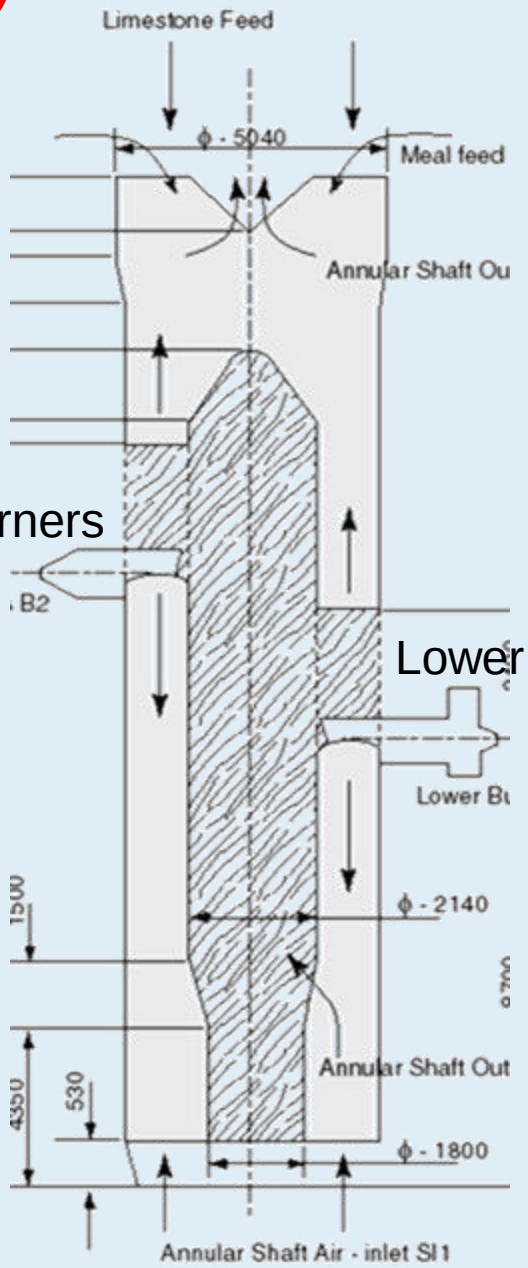

Lower burners

CINAR LTD

100% Lignite Substitution in a Lime Kiln

67% Lignite – 33% NG

100% Lignite

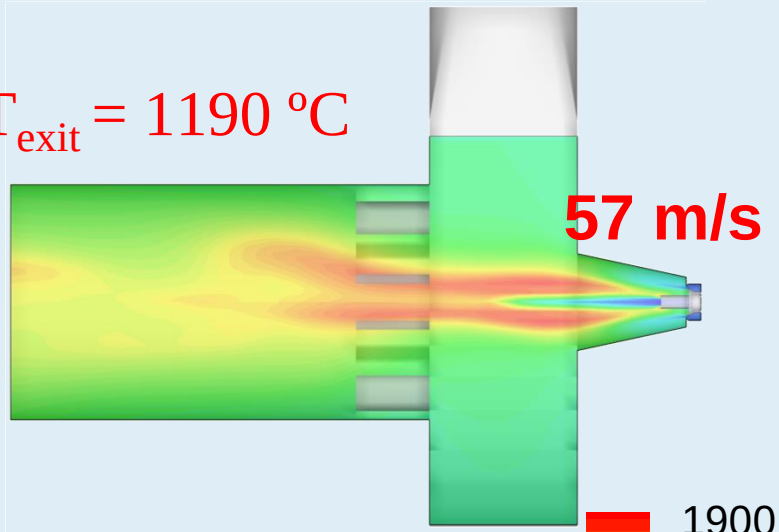

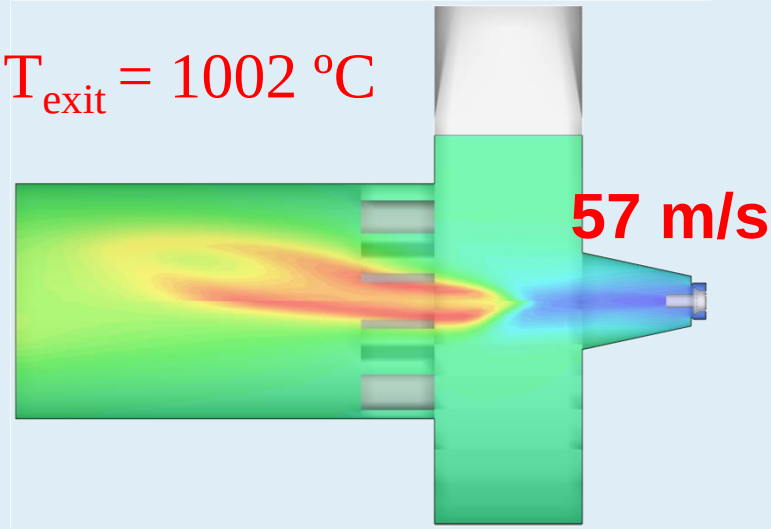

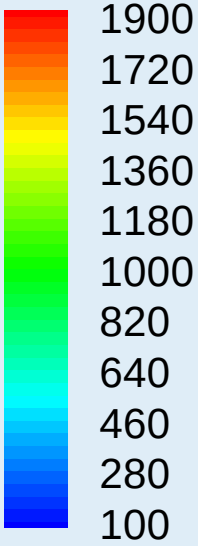

T ºC

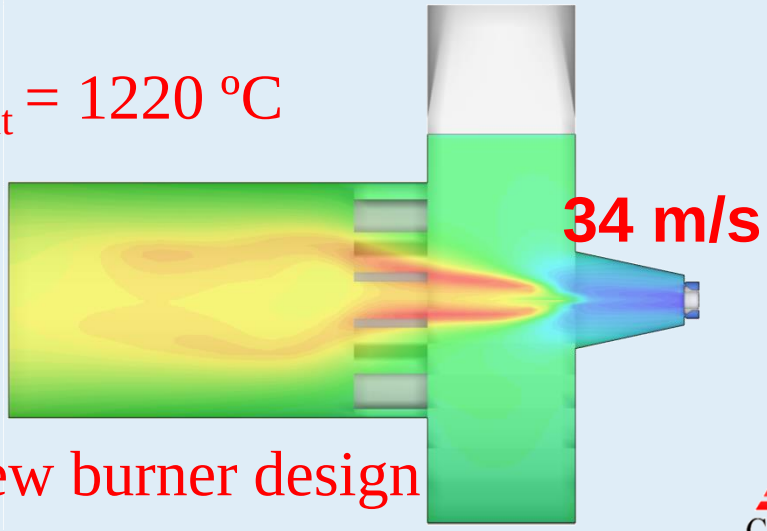

New burner design

CINAR LTD

Burner Design Modifications

100% Lignite

Old Burner

New Burner

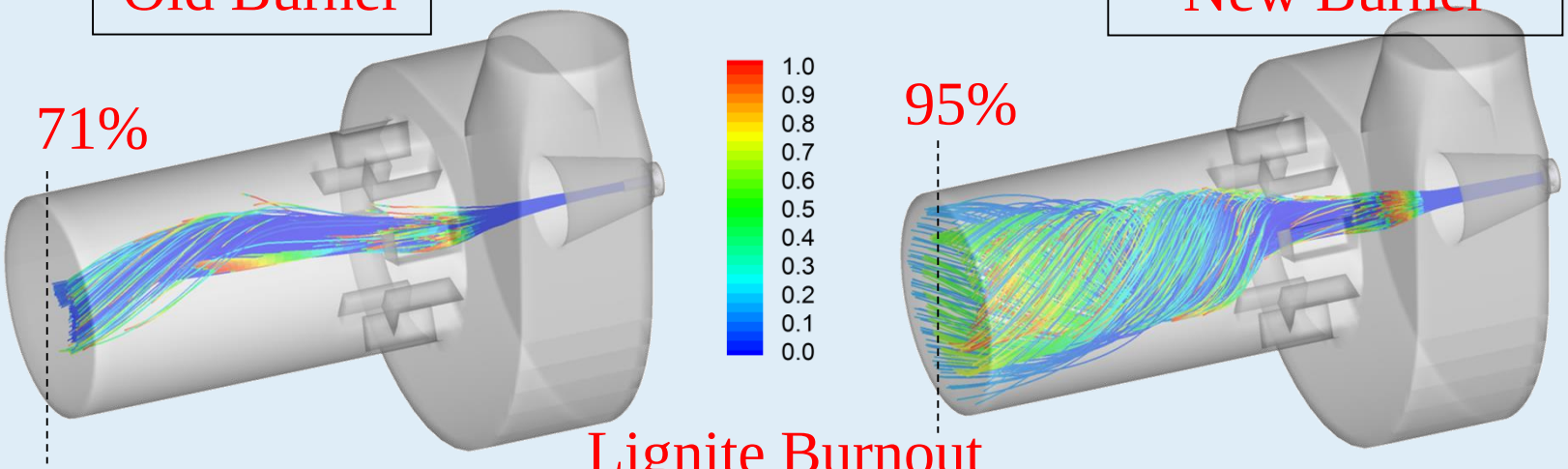

Lignite Burnout

1M€ Savings/ year

From one kiln

payback: 4 weeks

CINAR LTD

Kiln Burner (Rings and Balls)

Balls/rings? Mineralogy issue or its the burner or the calciner? – MI-CFD can help!

Analysis of Kiln Base Case Results – 70%NG, 30%Tallow

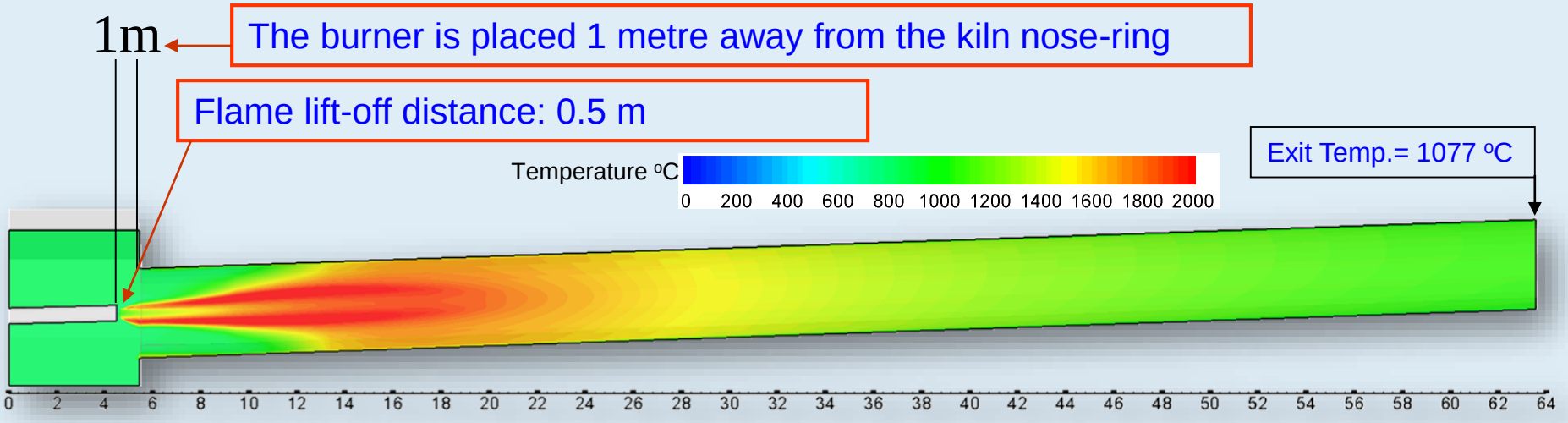

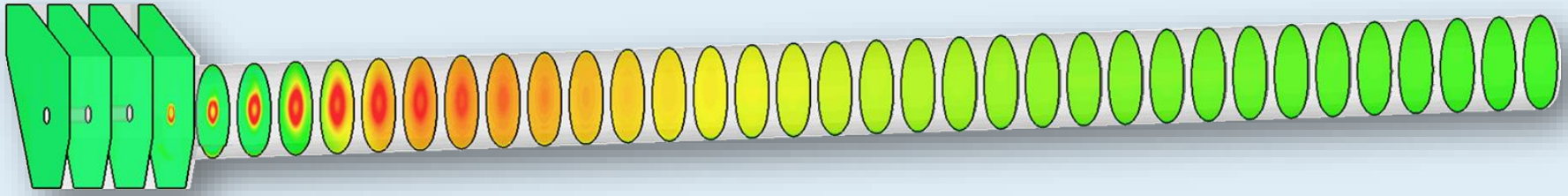

A single bright flame with hotter region several meters away from the burner tip.

CINAR LTD

Calciner Flame (Invisible Flame)

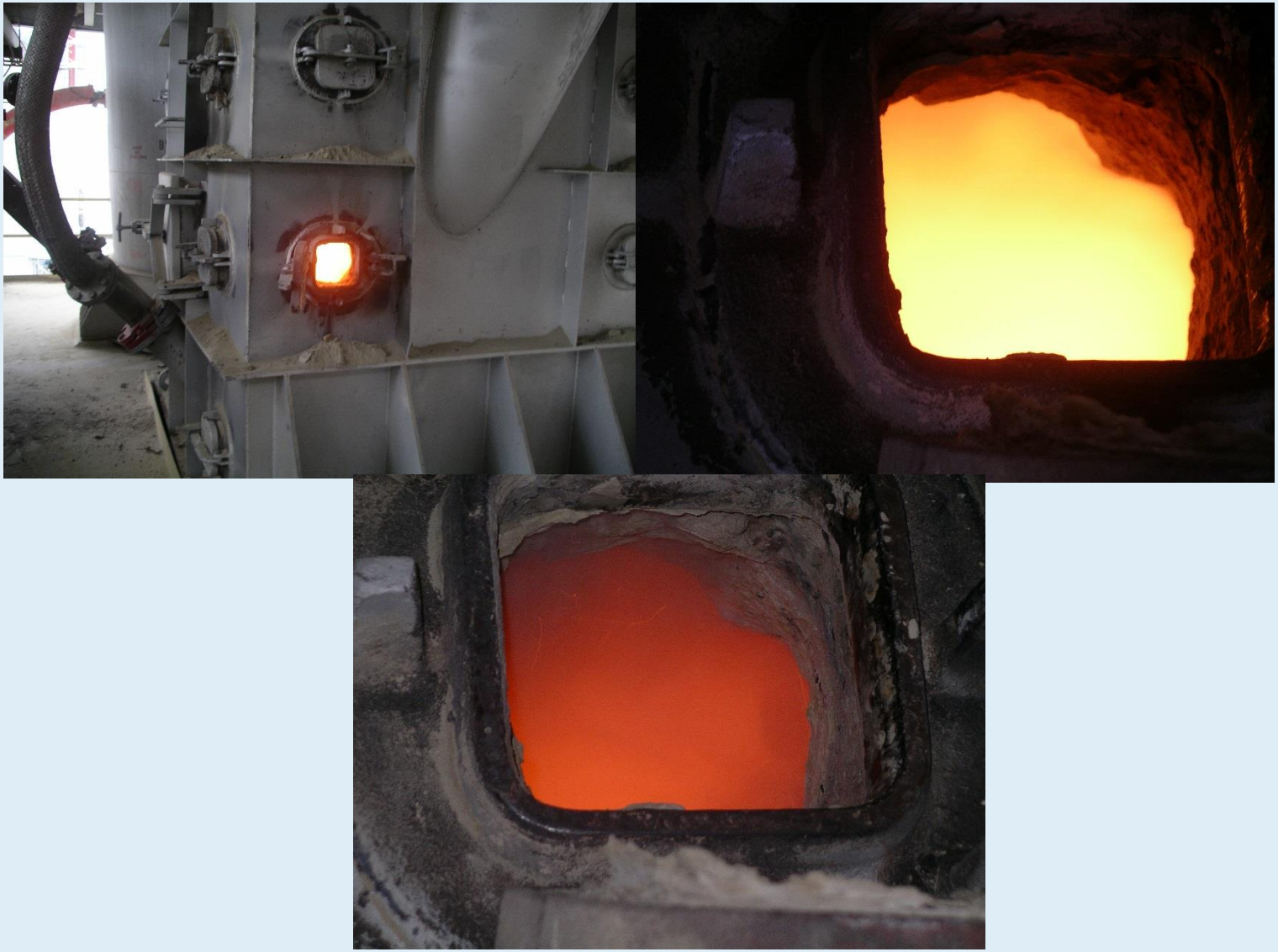

CINAR LTD

Calciner Flame (Localised Hot-Spots)

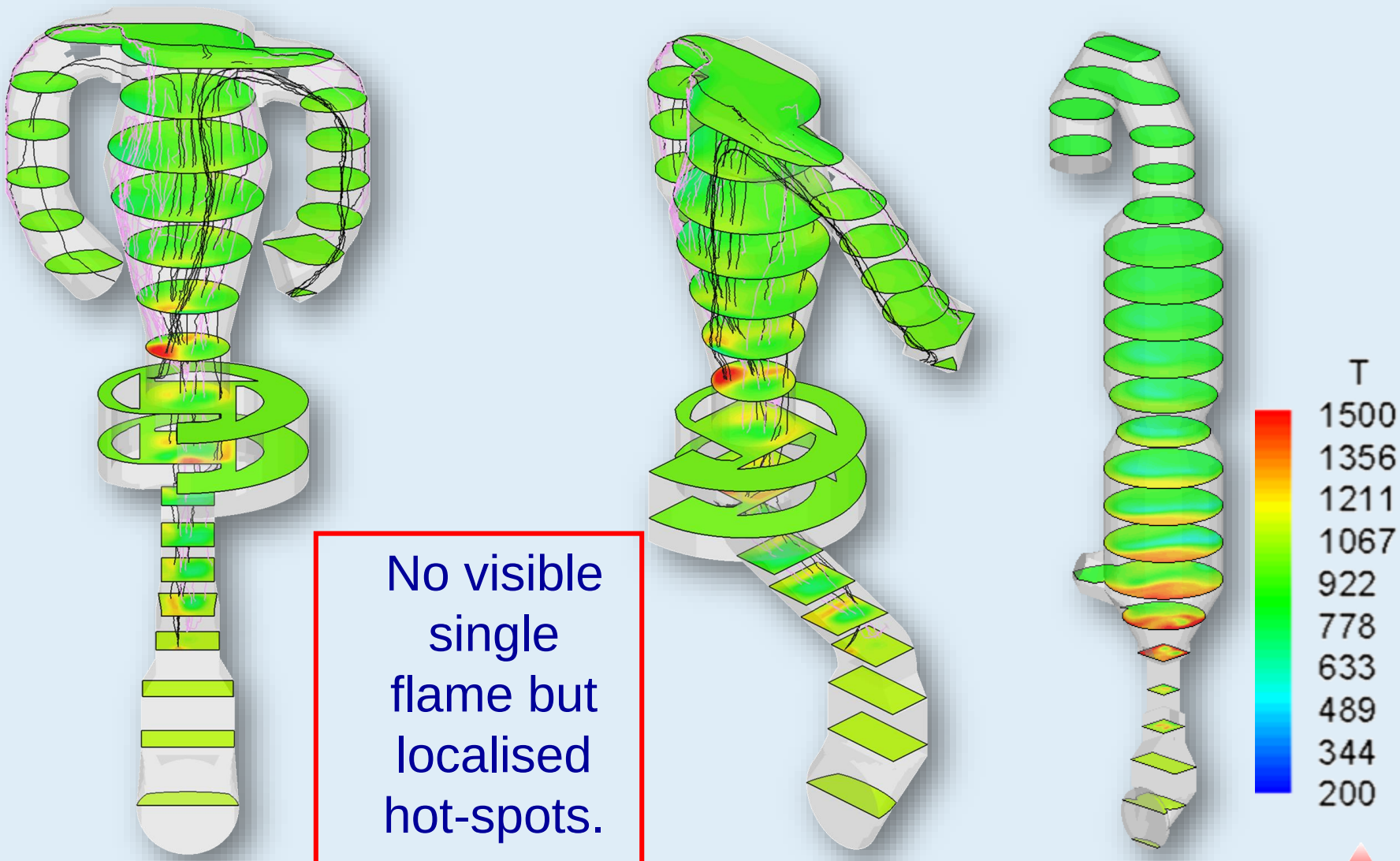

No visible single flame but localised hot-spots.

CINAR LTD

Fuel Streamlines in Oxygen: (Maximum oxygen 2.3%)

Oxygen concentrations along fuel streamlines in a 6-s calciner

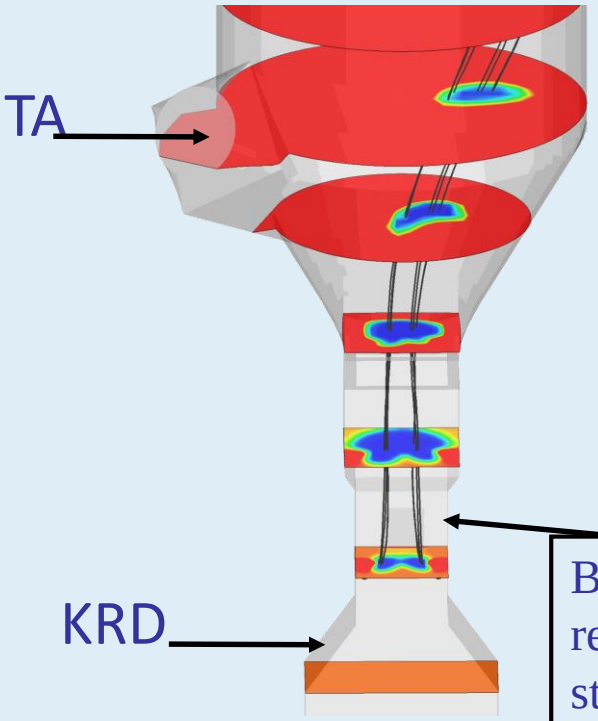

Black lines represent fuel streamlines

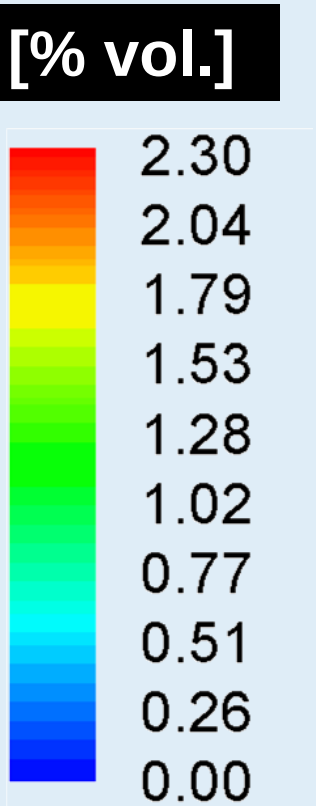

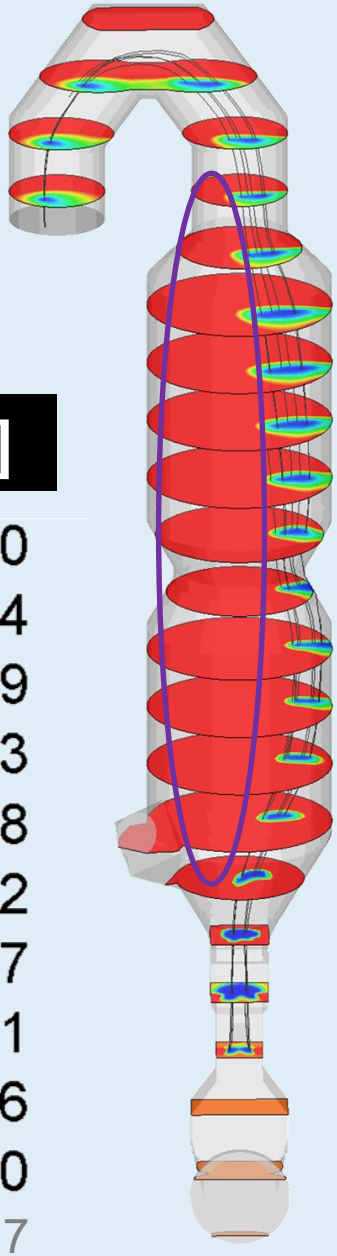

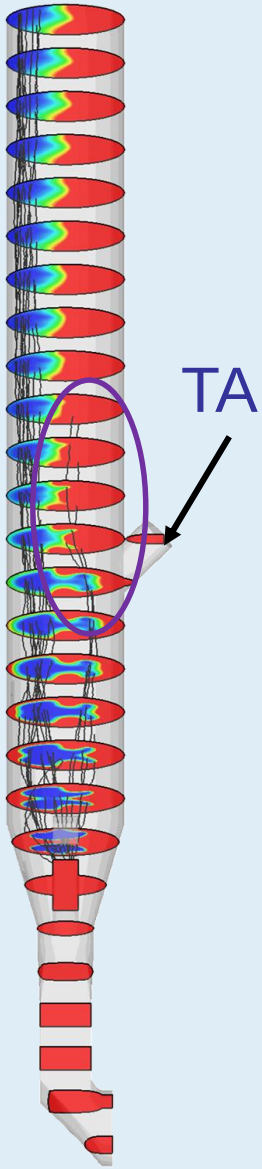

Calciners are more Fuel-Flexible but!!

- It is assumed that meal particles are fully dispersed and fuels fully burn!

- It is difficult to visualise (invisible flame) and correct it

(so calciner is taken as black box, RT is taken from the volume of calciner and the flow of the gases going through it);

The Most Common Problem:

Insufficient Mixing!

Kiln gases and TA Mixing

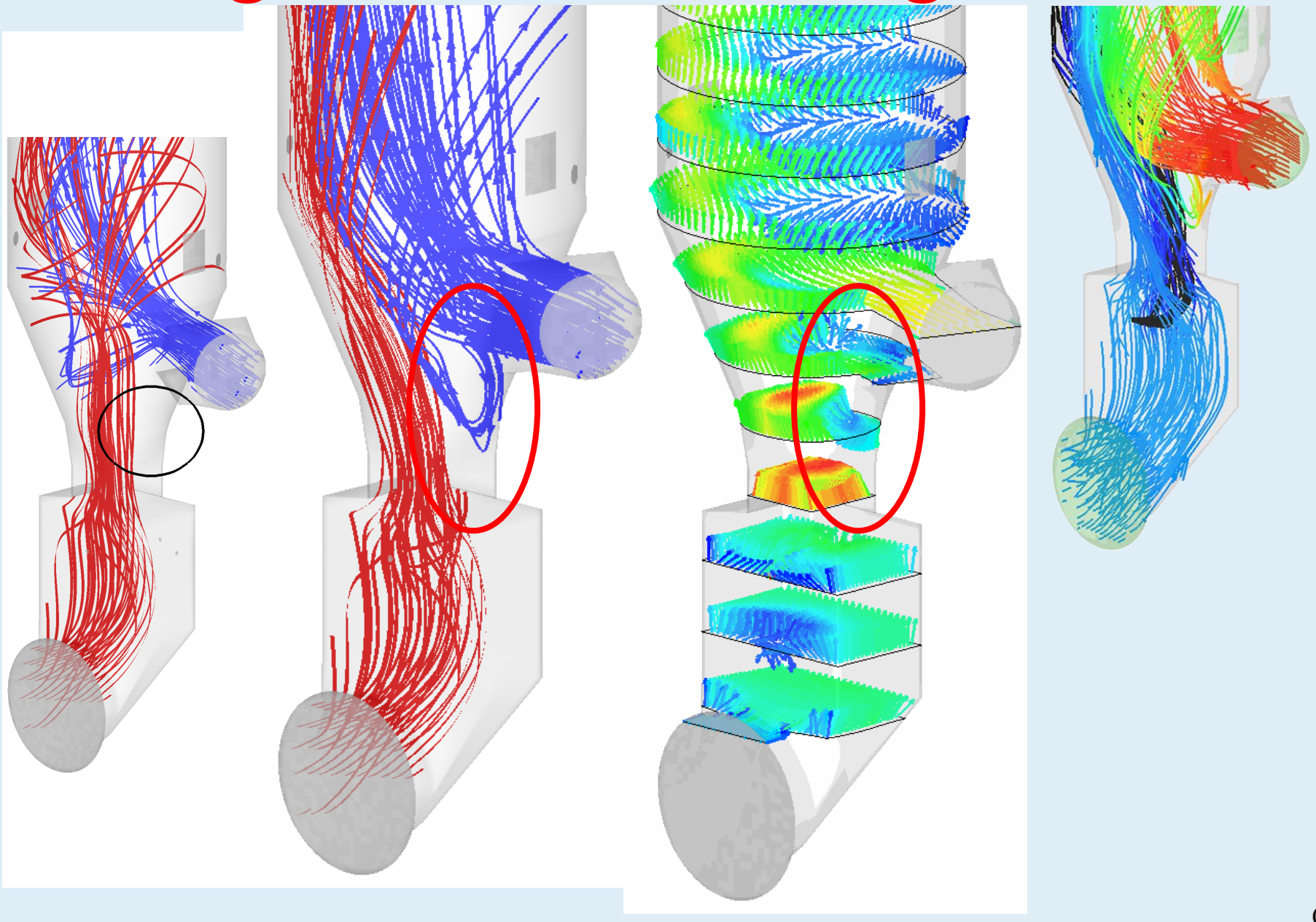

CINAR LTD

IRZ and ERZ (Kiln/Calciner)

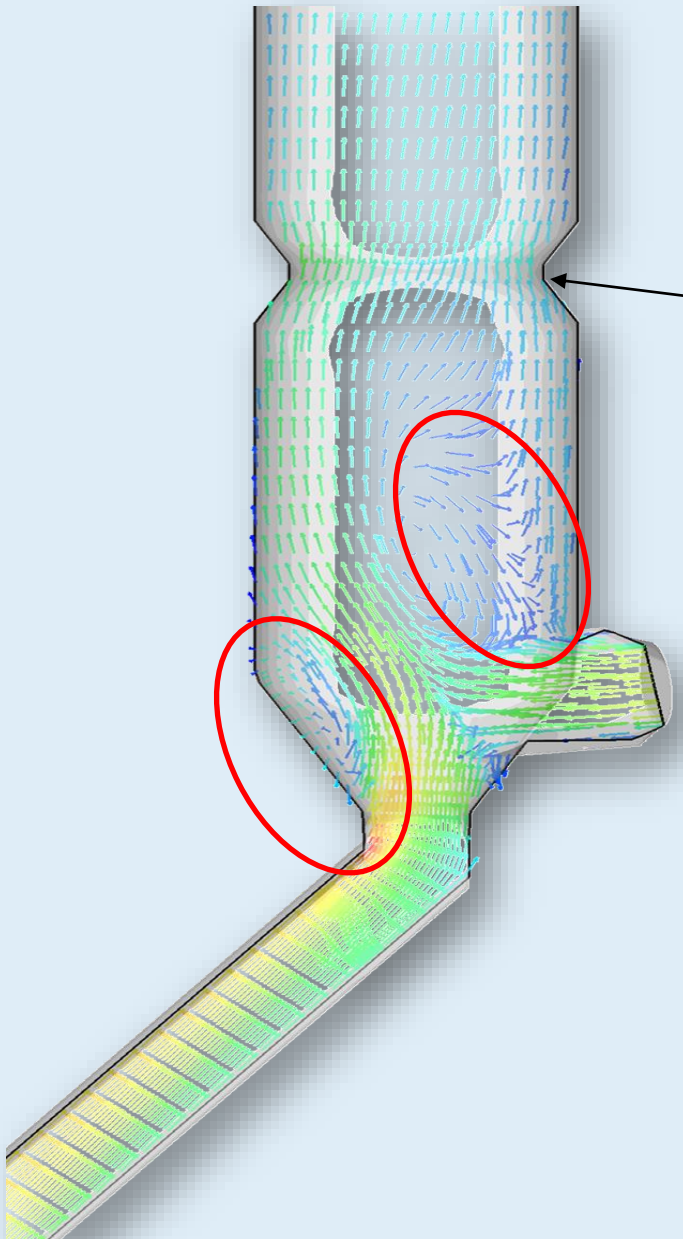

Throat/Venturi helps reducing flow stratification

TA/Riser duct momentum ratio: 45/55

Kiln and TA flow Mixing: Velocity Vectors

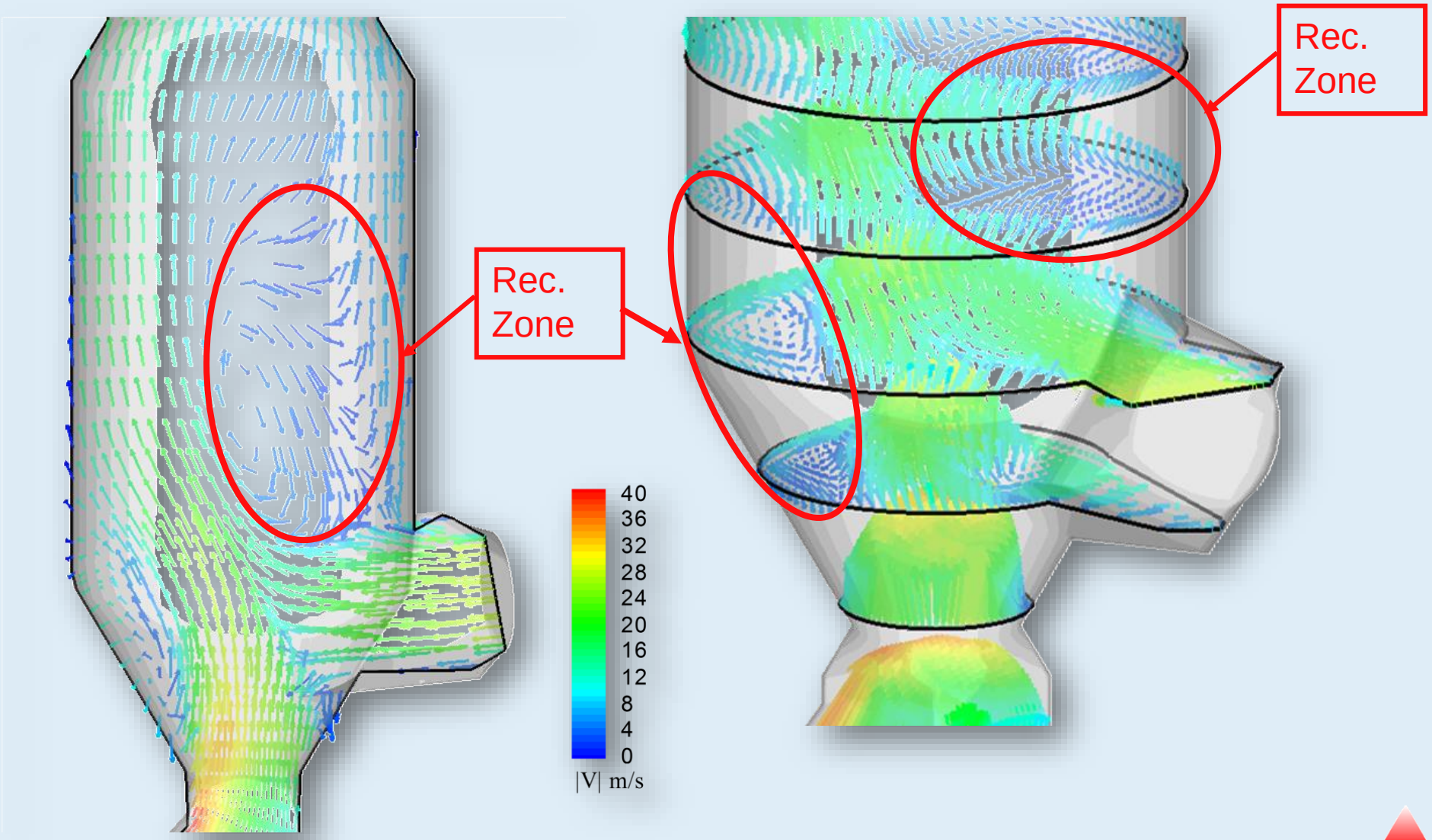

CINAR
LTD

Riser Burner:

Flow rate: 1.5kg/s; V=60 m/s

MR= 1:12

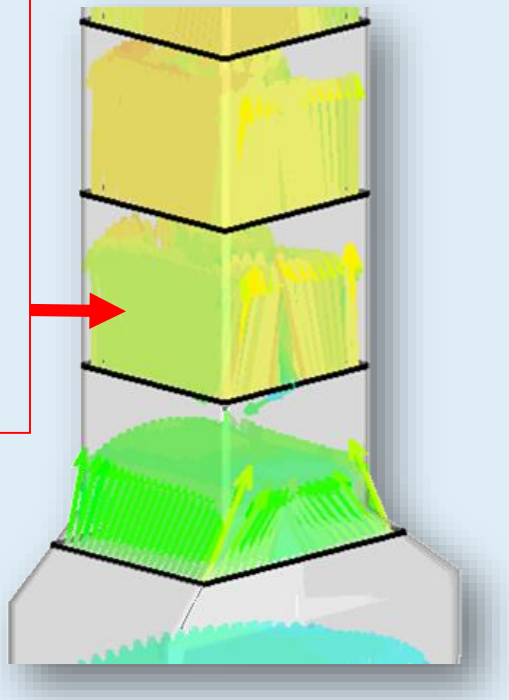

Riser flow: 32kg/s; V= 35m/s

Burner Velocity =150 m/s

MR= 1:2

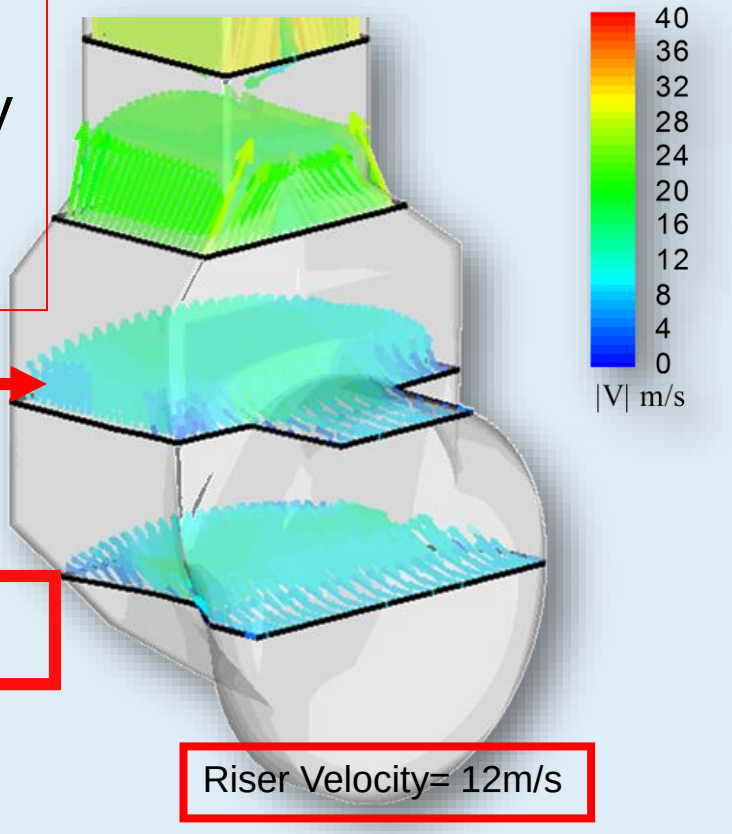

Riser Velocity= 12m/s

Half momentum mixing approach:

(relocating burners/JAMS!)

Calciner Geometries and the Residence time (s)

Calciners are fired with ≃ 60% of the fuel

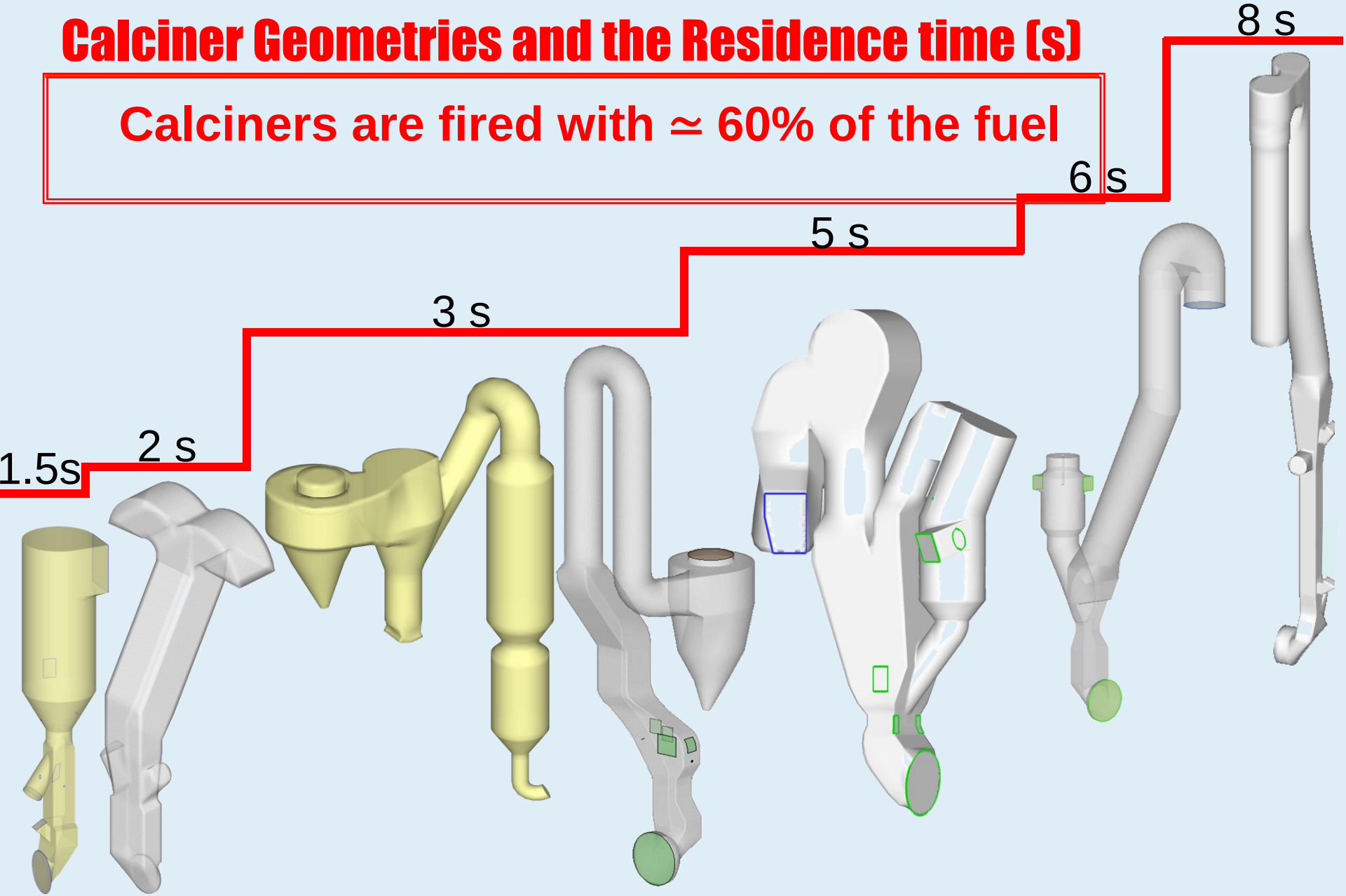

Typical Flow/Process Problems

- Flame Impingement,
- Flow stratification,
- Hot-spots,
- Volatile cycles (heat losses),
- Build-ups (plugging),
- Inefficient combustion issues,
- Emissions (CO, NOx, SO2, VOCs, Hg….)
- Clinker quality, i.e., (unreacted species, i.e., free lime)

CINAR LTD

What ‘Typically’ a Customer will get?

- A burner/combustion system design (for lower emissions, less deposits, stable kiln operation…….;
- A simple low-cost implementation (by plant and/or via Cinar associates);
- Free process analysis from plant data and estimate of benefits and payback time;
- On what MI-CFD model is based upon?

CINAR LTD

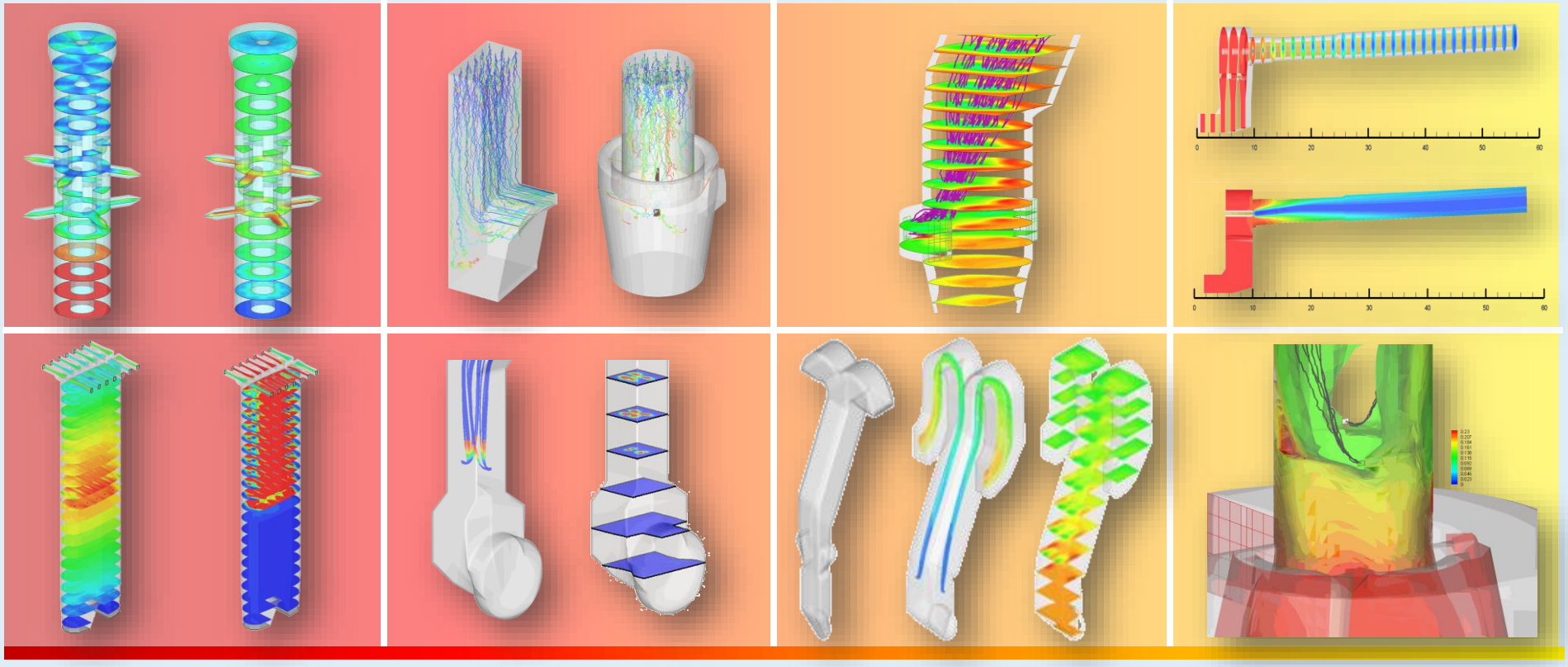

An introduction to CFD and MI-CFD

CINAR LTD

Process and Combustion Interactions

- Turbulence (mixing, excess air/ignition source, i.e., IRZ), radiation (confinement), calcination, combustion (in suspension - residence time):
- Single-phase/two-phase combustion (gas/oil/coal) - characterisation, combustion/emission data collection facilities;
- Mathematical Models to simulate combustion, flow, calcination – in order to save experimental costs;
- Multi-fuel combustion model and validation for a number of other waste fuels, i.e., RDF, ASR, SRF, SS, WW, MBM, MSW, tyre chips, whole tyres, diaper cubes.
- Generally applied mathematical tools: next slide

CINAR LTD

Empirical and Simplified Models?

- Empirical/Simplified Models relate inputs to outputs using experimental data or heat and mass balances.

- No detailed process/flame information.

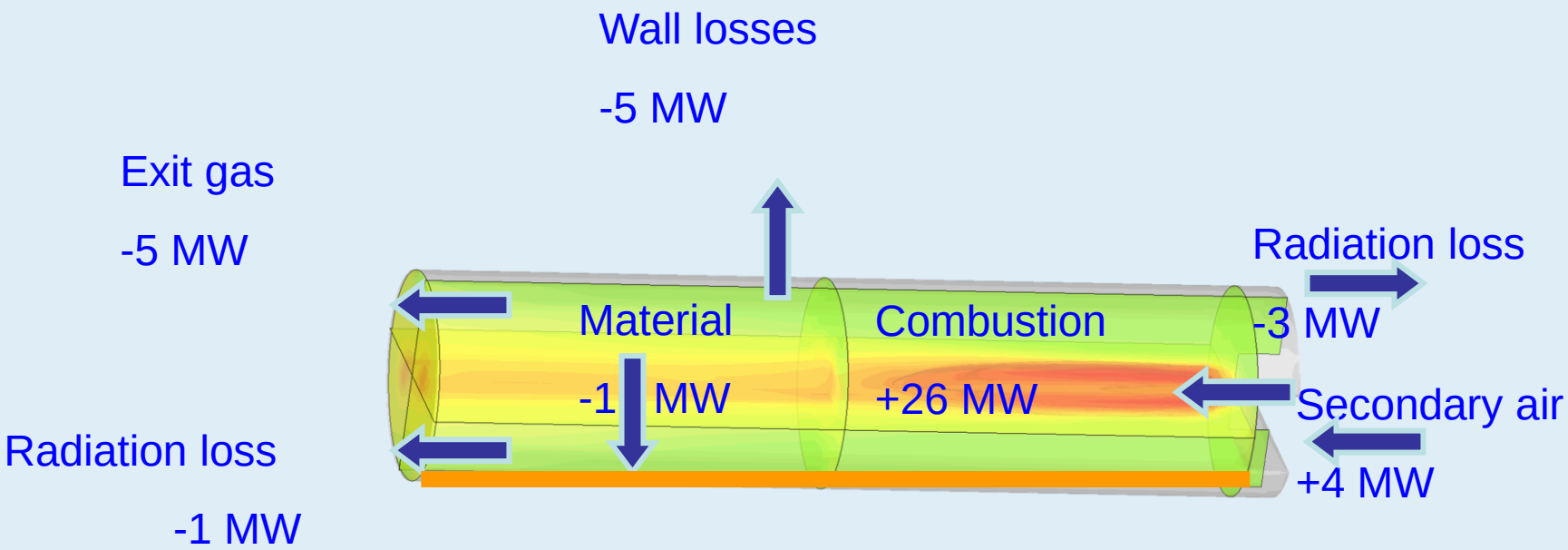

CINAR LTD

Physical Modeling

Difficulty with scaling criteria, information is only related to mixing and is of qualitative nature

CINAR LTD

Zonal/Marching Models

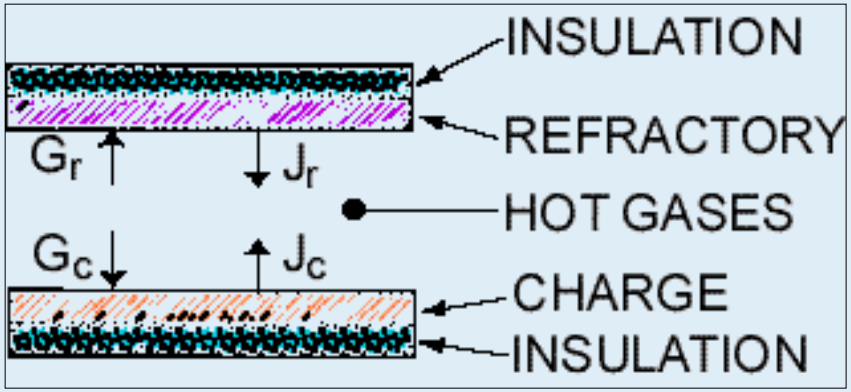

ASSUMPTIONS:

1. Each slab fully stirred.
2. Longitudinal heat release distribution known.
3. Net mass flow rates known at slab interfaces.

Information limited to radiation heat transfer

CINAR LTD

CFD is Based on Physical Laws

NEWTON: $F = ma$

FOURIER: $Q_{conduction} = k\,(T_1 - T_2) / L$

NUSSELT: $Q_{convection} = h\,(T_{fluid} - T_{surface})$

MAXWELL: $Q_{radiation} \sim \varepsilon T^4$

ARHENIUS: $R_{chemistry} \sim Y_{fuel}\, Y_{oxygen} \exp(-E/RT)$

CINAR LTD

Form of the Generalized Governing Equation

- Turbulence is characterized by a wide spectrum of scales. The smallest of which are very small (few μm) and cannot be resolved by even the biggest computers.
- *So models are required to link the effects of turbulence to solve for <u>time-averaged variables</u>.*

$$\boxed{\frac{\partial}{\partial x_j}\left\{\bar{\rho}\tilde{U}_j\tilde{\phi} + \bar{\rho}\,\widetilde{u_j''\phi''}\right\} = \frac{\partial}{\partial x_j}\left\{\Gamma_\phi \frac{\partial \bar{\phi}}{\partial x_j}\right\} + \bar{S}_\phi}$$

- This can only be solved by numerical means using a modern computer.

CINAR LTD

Computational Fluid Dynamics (CFD)

- Developed with the advent of modern computers, first model CFD model from Imperial College (teach code).
- So, it began to take off in the 1970's for flow simulations.
- First applications in the aerospace and gas turbine industries, followed by furnaces.
- **But for cement industry, still not enough information to calculate representative oxygen and temperatures fields, required for trace species, i.e., NO, CO**

CINAR LTD

Development of MI-CFD

- Process interaction failings of ‘conventional’ CFD are overcome by incorporating the calcination and clinkering reactions;

- MI-CFD has been applied to plant components, for reliable trend predictions.

- MI-CFD enables one to ‘see’ and optimise a process, without excessive cost and risk!

CINAR LTD

Calcination & clinkering Models

- Raw materials: $CaCO_3$, $MgCO_3$, SiO_2, Al_2O_3, Fe_2O_3, H_2O, others considered inert:

$$CaCO_3 \longrightarrow CaO + CO_2 - \Delta H \text{ (SRM)}$$

- Species considered in the clinker model:
  CaO, $2CaO.SiO_2$ (C_2S), $3CaO.SiO_2$ (C_3S),
  $3CaO.Al_2O_3$ (C_3A),
  $4CaO.Al_2O_3.Fe_2O_3$ (C_4AF)

- $CaCO_3 \rightarrow CaO + CO_2$
- $CaO + C_2S \rightarrow C_3S$
- $2CaO + SiO_2 \rightarrow C_2S$
- $3CaO + Al_2O_3 \rightarrow C_3A$
- $4CaO + Al_2O_3 + Fe_2O_3 \rightarrow C_4AF$

CINAR LTD

MULTI-FUEL FIRING

2-D projection of a 3-D mixture fraction space for solid fuel combustion

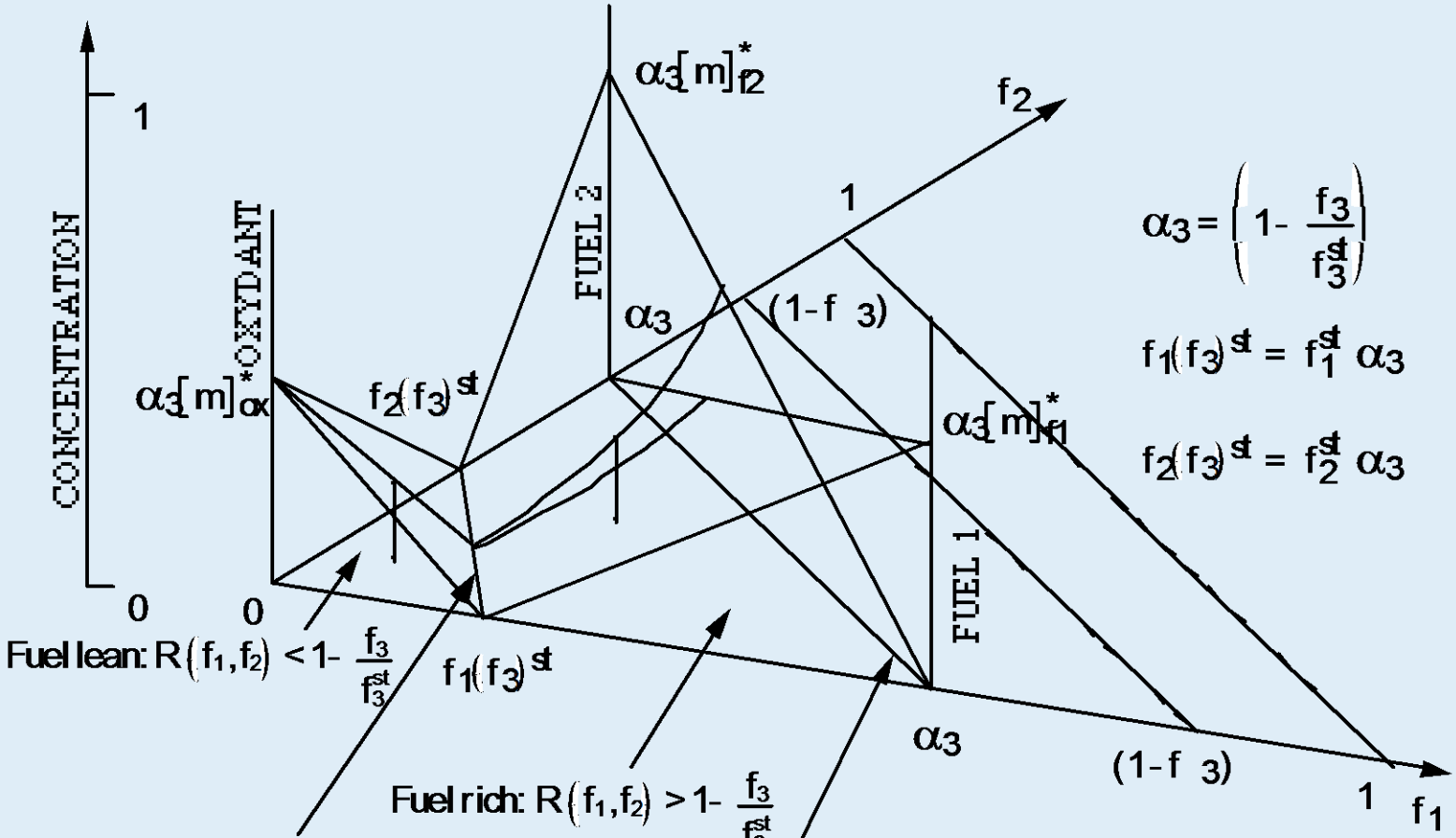

$$\alpha_3 = \left(1-\frac{f_3}{f_3^{st}}\right)$$

$$f_1(f_3)^{st} = f_1^{st}\,\alpha_3$$

$$f_2(f_3)^{st} = f_2^{st}\,\alpha_3$$

$$R^{st}(f_1,f_2) \equiv \frac{f_1}{f_1^{st}} + \frac{f_2}{f_2^{st}} = 1 - \frac{f_3}{f_3^{st}}$$

$$B(f_1,f_2) \equiv f_1 + f_2 = 1 - \frac{f_3}{f_3^{st}}$$

CINAR LTD

Post-Processing for Trace Species

- **Proven global reactions are used for the CO and NOx (nitrogenous species).**

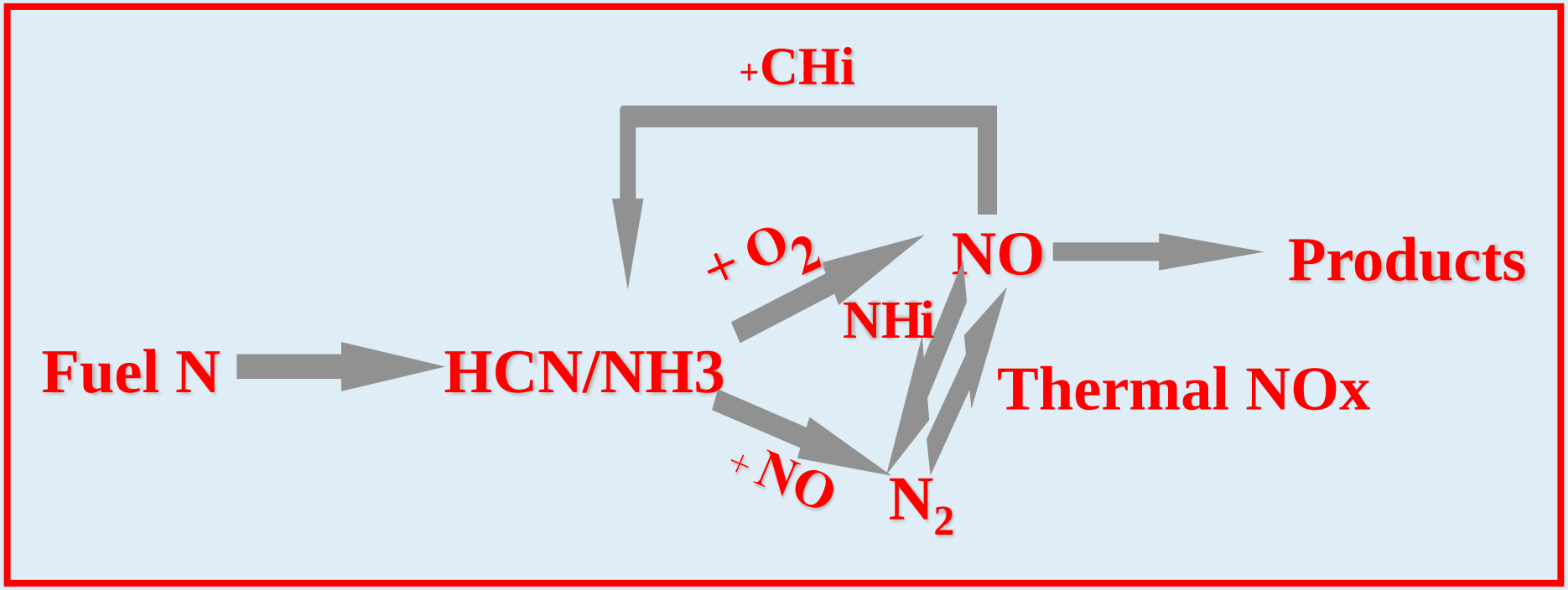

CINAR LTD

Main Features of MI-CFD

- Multi-fuel capability (coal, oil, gas, AF's)
- Calcination and clinker formation chemistry.
- Coupling between combustion and meal models.
- Accurate account of thermal radiation.
- 3D MI-CFD software with unstructured meshes.
- GUI mesh generation.
- NOx emissions, including calciner 'reburn' and SNCR.
- CO,SO2/SO3 formation/partitioning models.
- Turbulence models (K-ε, Reynolds Stress, etc.).
- Other validated physical and chemical models, i.e., slagging (build-up), fouling, toxic metals, VOCs, HCl.

How good these Models are?

CINAR LTD

4-Stage Calciner

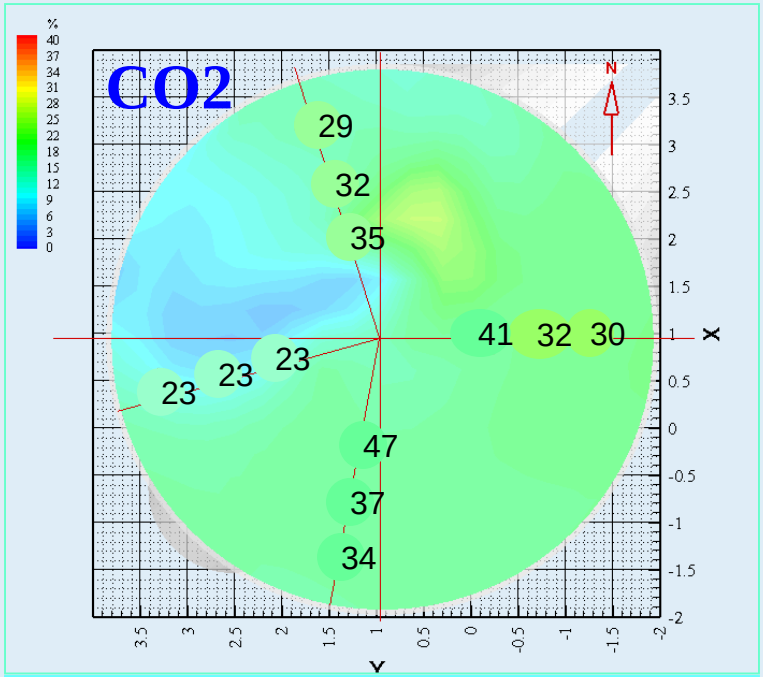

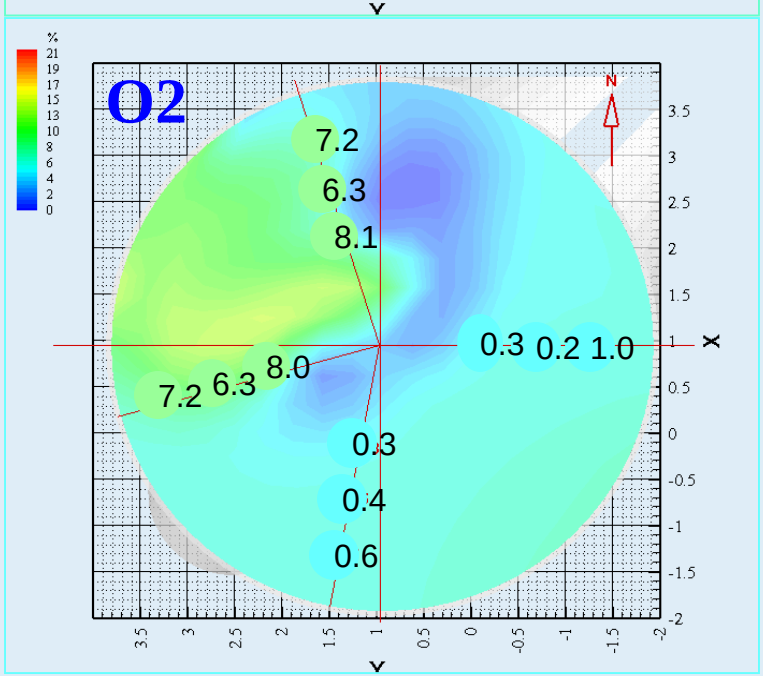

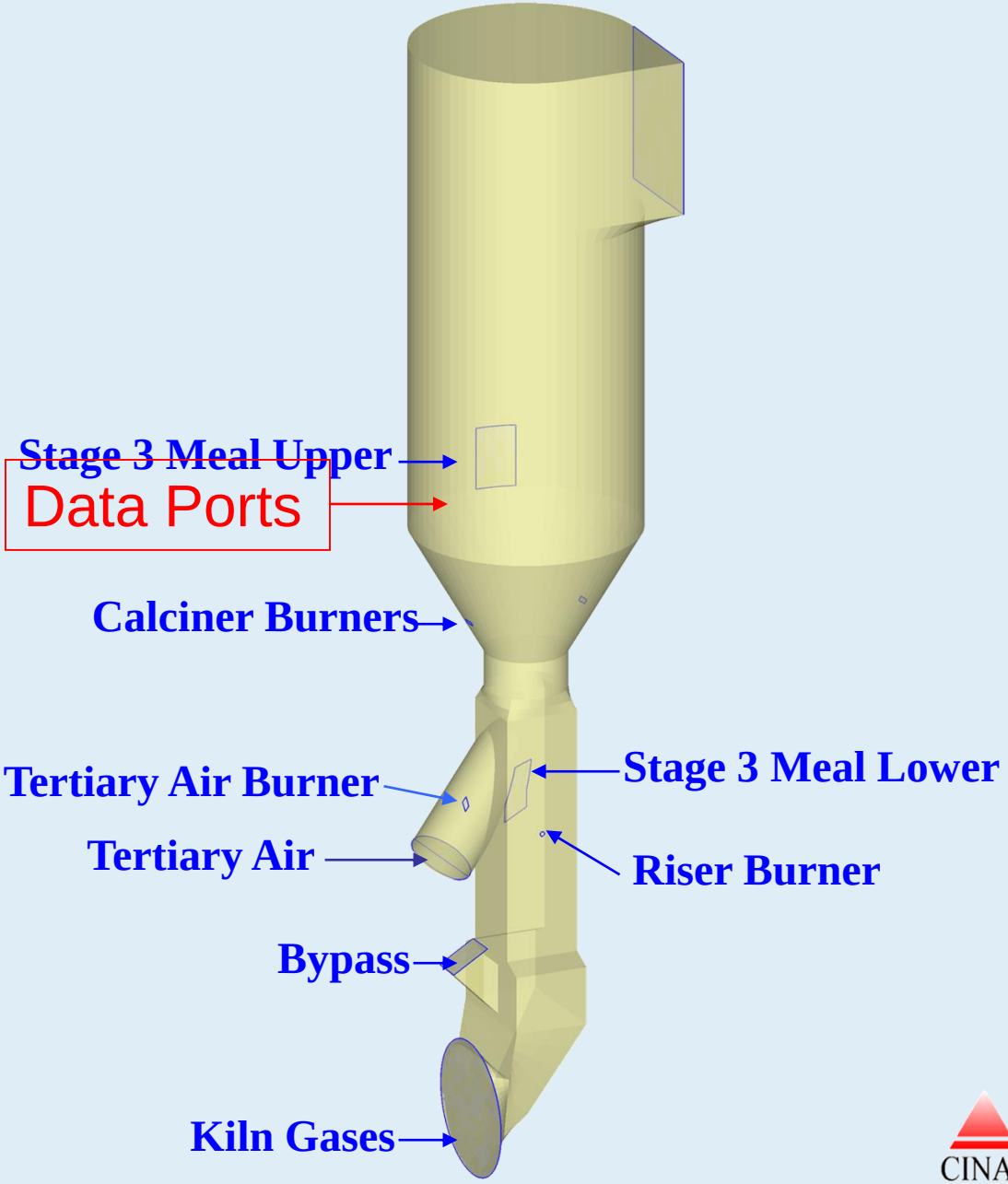

CINAR LTD

Plant Data Comparison with MI-CFD (Oxygen)

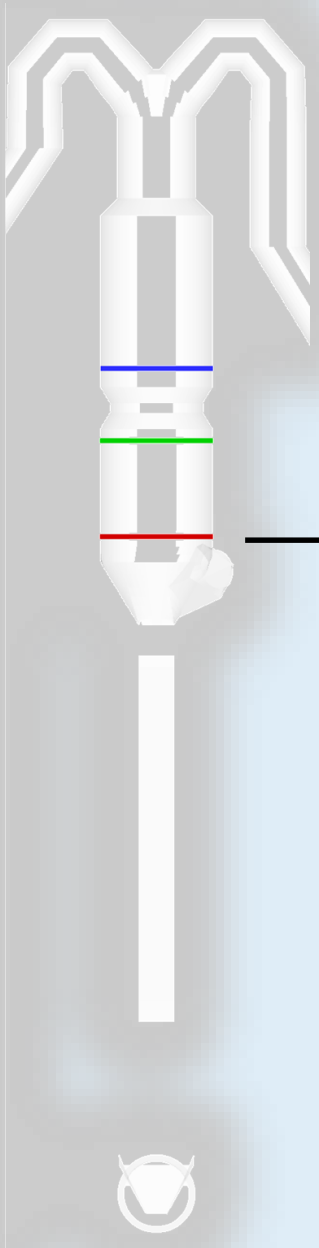

S-1.2	Radial distance (mm)	Oxygen (%)
	200	14.8
	400	15.3
	600	14.9

S-1.3	Radial distance (mm)	Oxygen (%)
	200	10.1
	400	10.1
	600	9.5

S-1.1	Radial distance (mm)	Oxygen (%)
	200	11.5
	400	12.1
	600	11.9

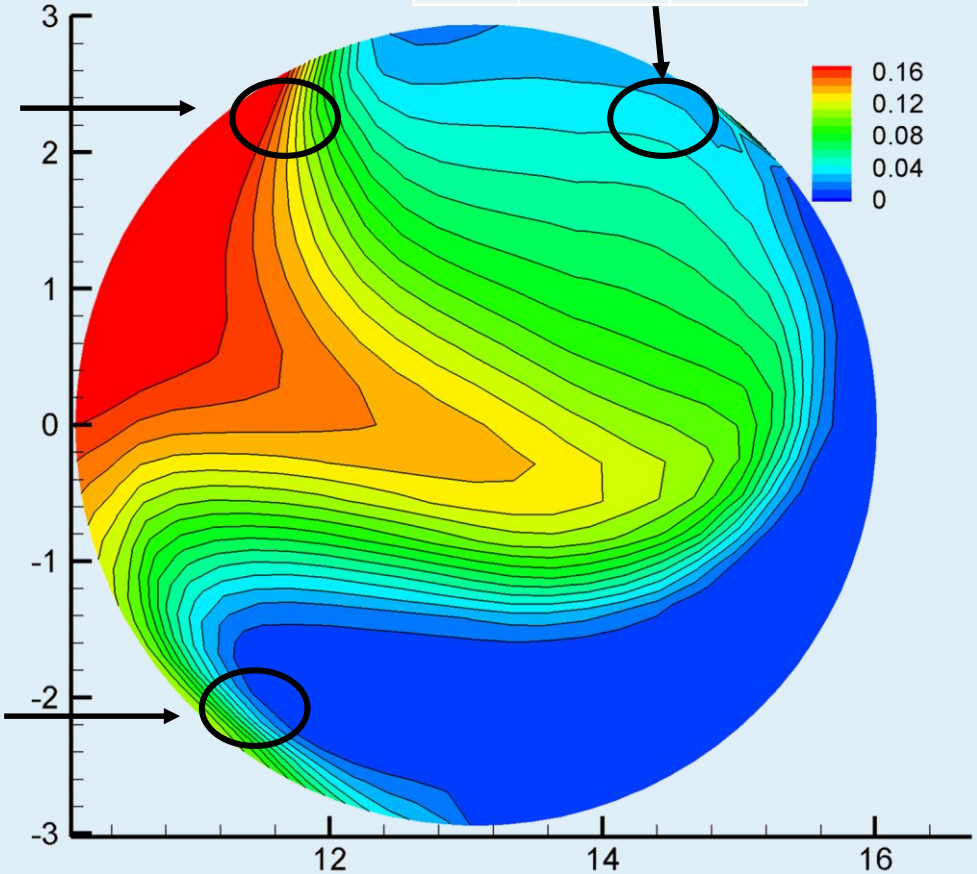

CINAR LTD

Plant Data Comparison with MI-CFD (Oxygen)

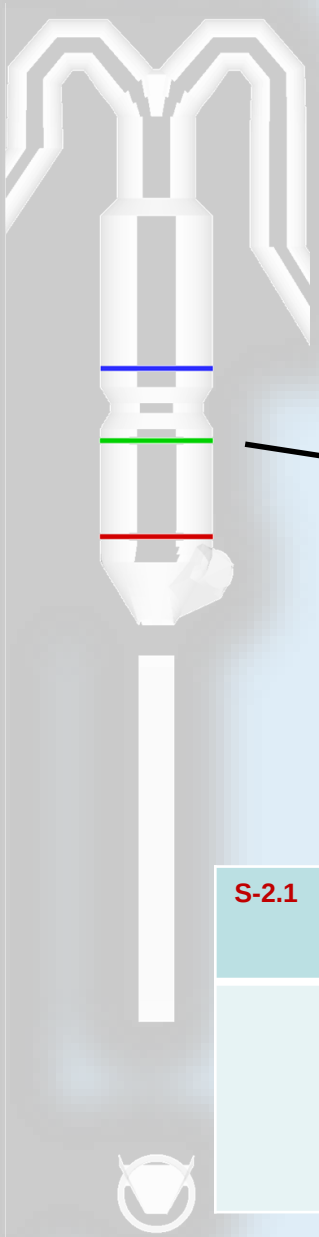

S-2.2	Radial distance (mm)	Oxygen (%)
	200	2.3
	400	2.2
	600	1.9

S-2.3	Radial distance (mm)	Oxygen (%)
	200	1.8
	400	1.6
	600	1.7

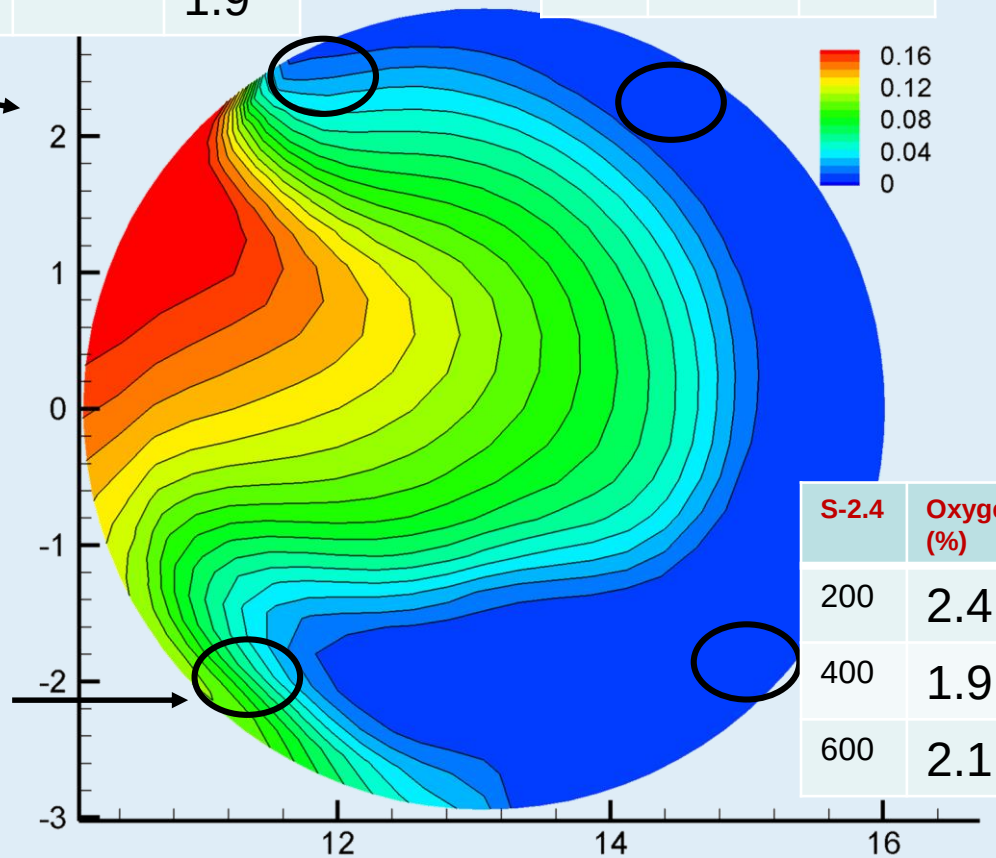

S-2.1	Radial distance (mm)	Oxygen (%)
	200	8.8
	400	8.1
	600	9.1

S-2.4	Oxygen (%)
200	2.4
400	1.9
600	2.1

Plant Data Comparison with MI-CFD (Oxygen)

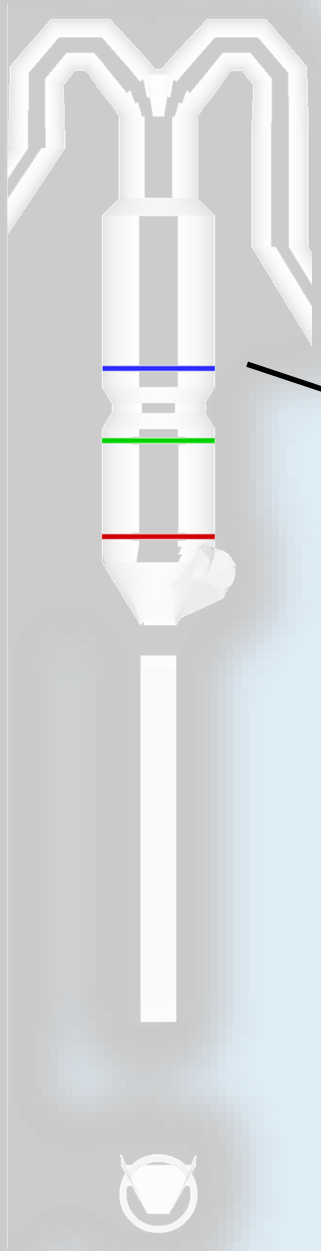

S-3.2	Radial distance (mm)	Oxygen (%)
	200	0.9
	400	1.0
	600	0.9

S-3.3	Radial distance (mm)	Oxygen (%)
	200	1.0
	400	1.1
	600	0.9

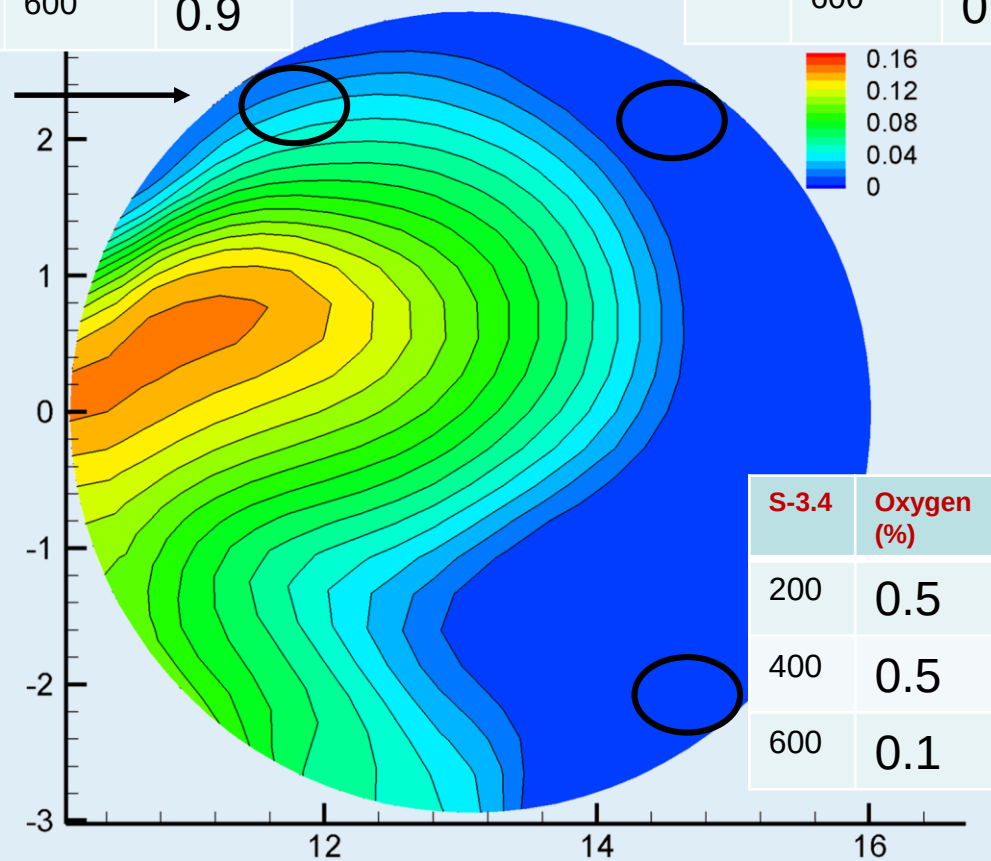

S-3.4	Oxygen (%)
200	0.5
400	0.5
600	0.1

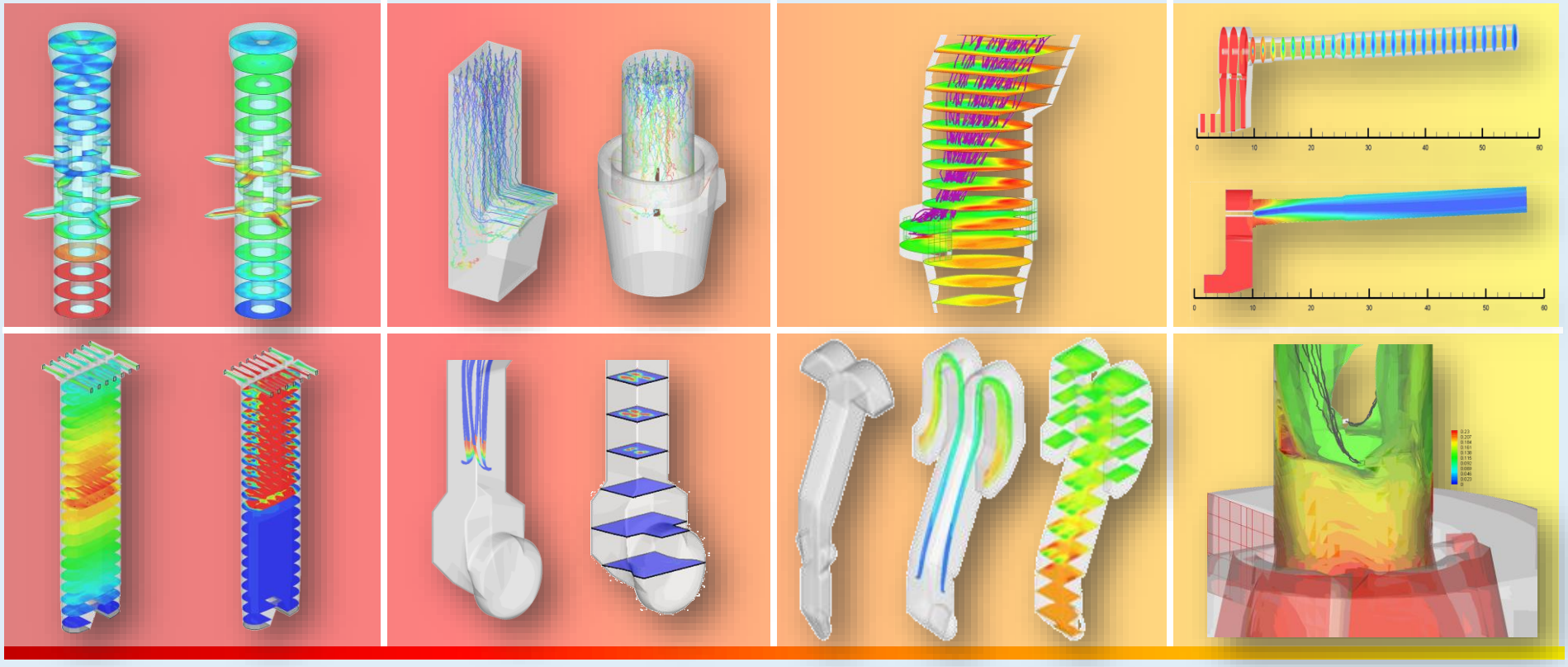

Boundary and inlet conditions

CINAR LTD

The Problem – the Solution

- After identifying an improvement potential, a proposal is submitted to plant with expected benefits of the project and payback duration;
- Cinar's guarantee is payback in a matter of weeks;
- After agreement with plant, a PO is issued and project starts;
- First a Base Case is simulated – that is the current operating condition;
- Then the solution finding simulations (What-Ifs) are carried out in agreement with plant;
- The next slides show the required information for the MI-CFD model.

CINAR LTD

Geometrical Details and boundary Conditions

- MI-CFD simulations will require detailed kiln, kiln-hood, preheater/precalciner drawings showing all the inlets, the kiln backend, details of splash box, and kiln hearth regions, locations of burners, hot-meal entry location(s), tertiary air duct(s) dimensions, and the outlet to the cyclone region.

- **CAD drawings or photocopies of existing printouts**

CINAR LTD

Geometrical Details and boundary Conditions

- NG/oil chemical composition (proximate and ultimate analysis), particle/droplet size distribution, calciner burner feed rates;
- Hot meal particle size distribution, feed rate at each injection location and hot meal analyses (I.e., LOI) at the calciner entry locations and at the exit of the calciner;
- Kiln inlet/backend hot meal expected composition (LOI) and feed rate as well as the composition of the combustion gases (O_2,CO,CO_2), their temperature and the kiln burner fuel and air flow rates and respective temperatures

CINAR LTD

Cooler Geometry and Inlets

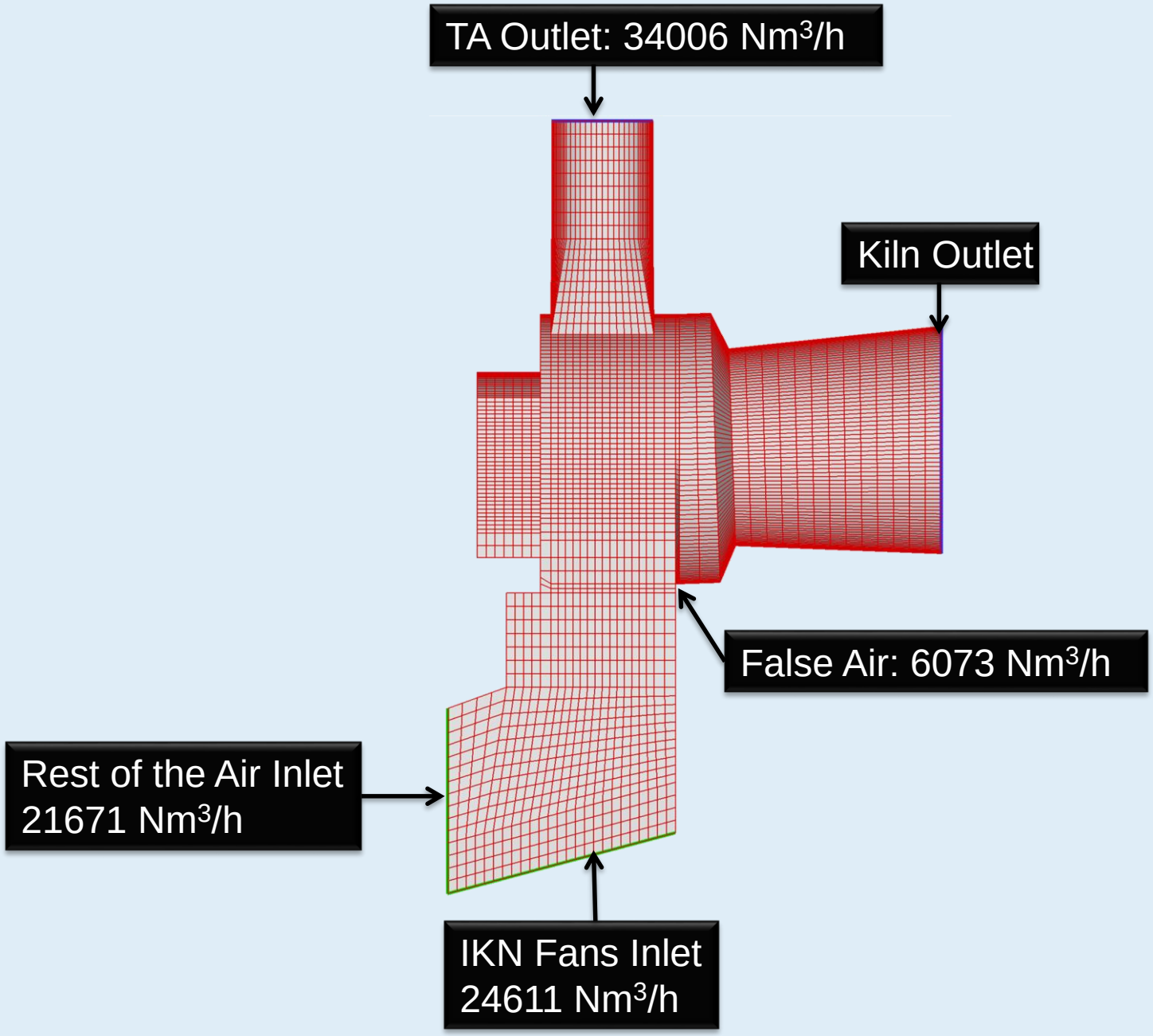

Geometry and Dimensions

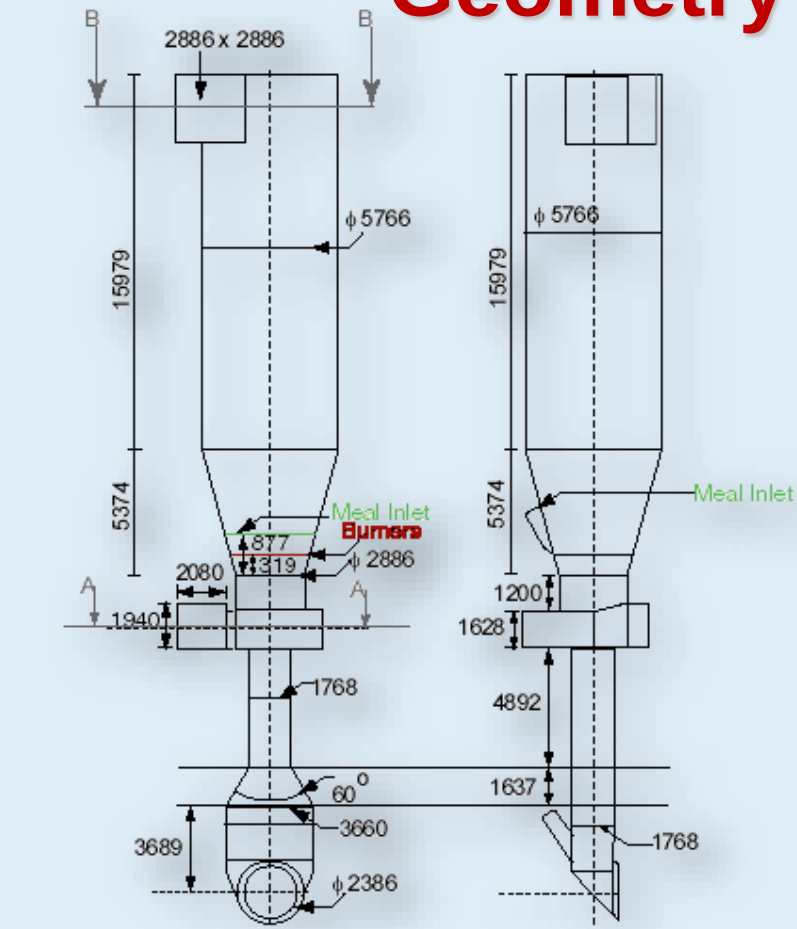

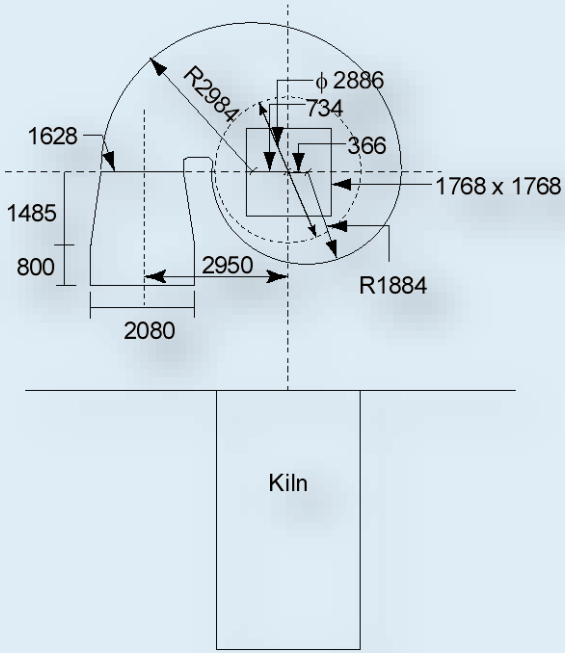

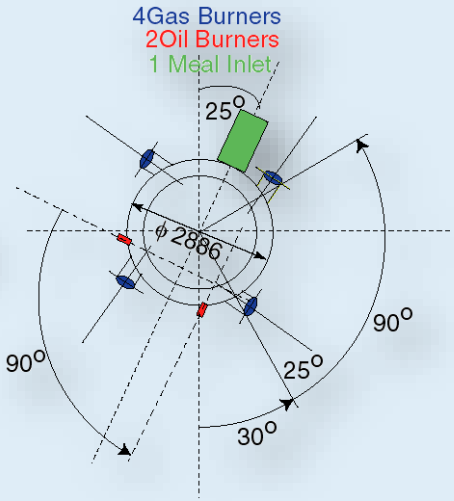

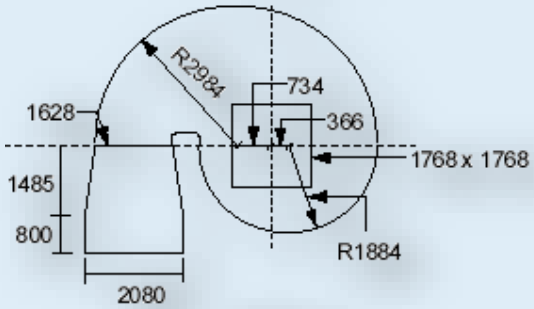

Section A-A
Scale 1:50

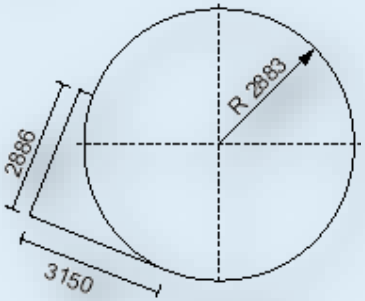

Section B-B

Computational Grid

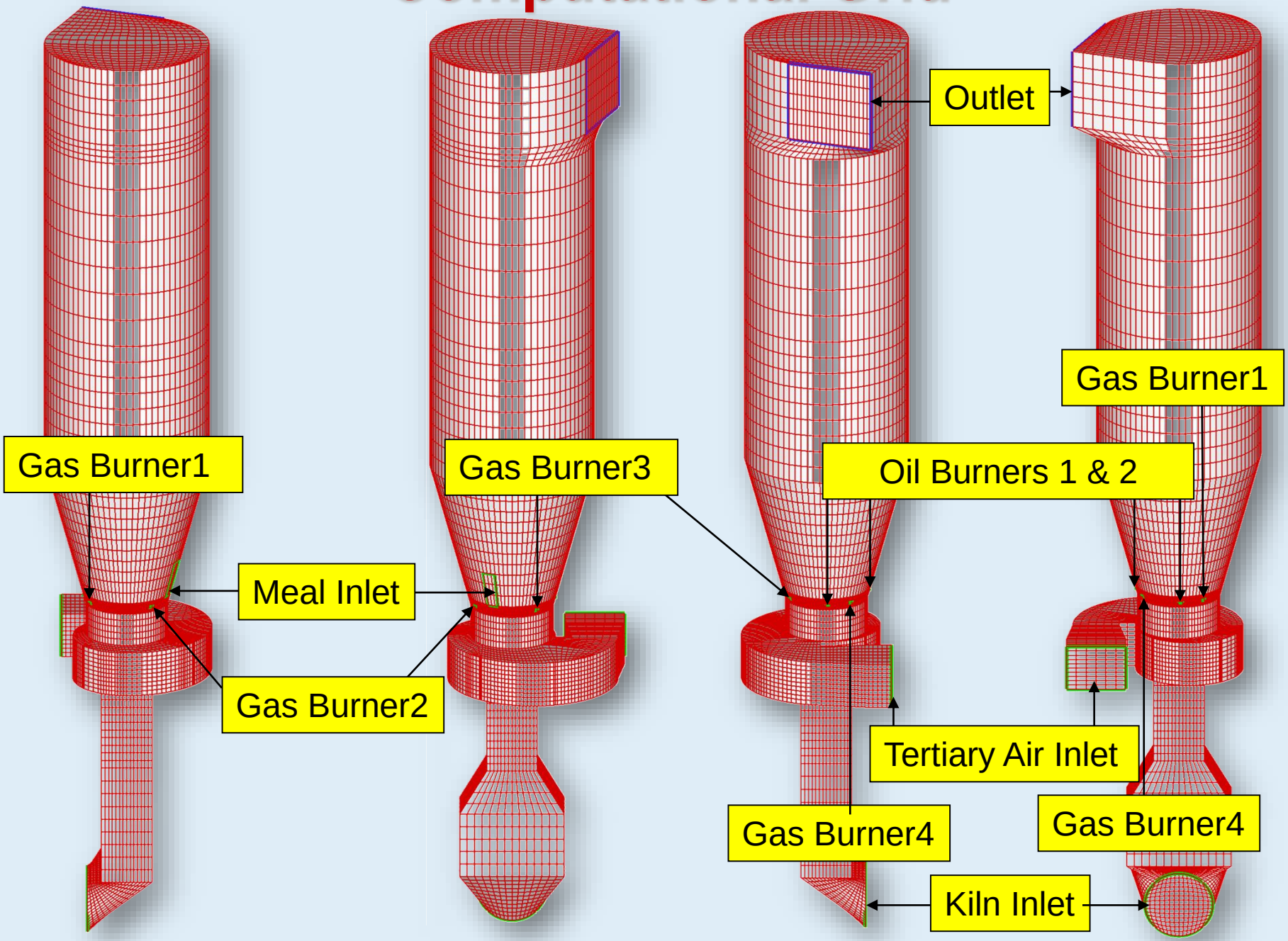

Simulation Data – Base Case

Kiln Gases		**kg/s**	**tph**
	Flow Rate	19.033	68.52
		ºC	**K**
	Temperature	1050	1323
Oil		**kg/s**	**tph**
	Fuel Flow Rate (total)	**0.5278**	**1.9**
	Burner 1	0.2639	
	Burner 2	0.2639	
Gas		**kg/s**	**tph**
	Fuel Flow Rate (total)	**1.7**	**6.12**
	Burner 1	0.425	
	Burner 2	0.425	
	Burner 3	0.425	
	Burner 4	0.425	
Tertiary Air		**kg/s**	**Nm^3/h**
	Flow Rate	30.53	85401
		ºC	**K**
	Temperature	857	1130
Stage 4 Meal		**kg/s**	**tph**
	Flow rate	48.61	175
		ºC	
	Temperature	802	
	LOI (Adjusted acc. to C5)	28	

Kiln Gases	
CO2	**0.2704**
H2O	**0.0646**
N2	**0.6425**
O2	**0.0225**

880 kcal/kg

Simulation Data– Base Case

Fuel Data:

Natural Gas Composition (Mass %)	
	%
C	67.8
H	20.1
N	0.09
O	12.01

Gas Calorific Value	36.3	MJ/Nm^3
	41.84	MJ/kg
Oil Calorific Value	34.59	MJ/kg

O2 %	Kiln Back End	2.36
	Calciner Exit	0.56

Stage 4 Meal PSD

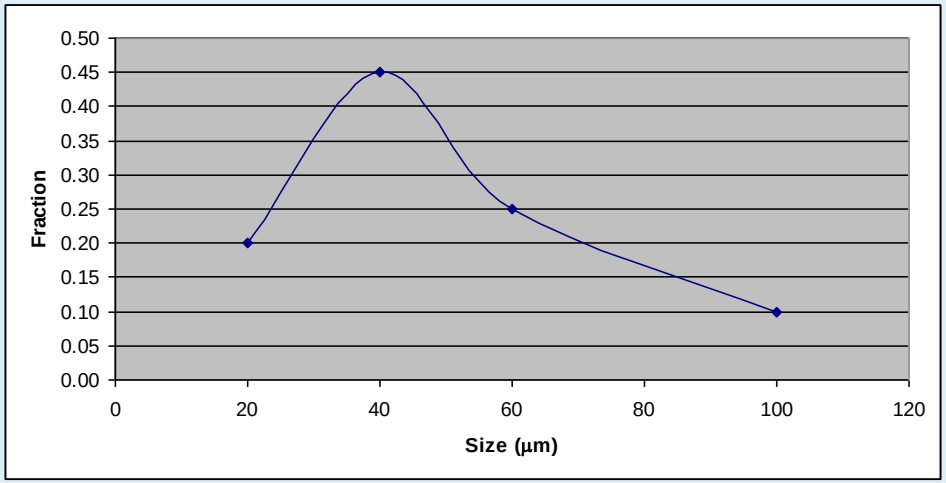

Oil DSD